OFFICE OF THE UNDER SECRETARY OF DEFENSE

3000 DEFENSE PENTAGON
WASHINGTON DC 20301-3000

ACQUISITION AND TECHNOLOGY

25 NOV 1996

MEMORANDUM FOR: SEE DISTRIBUTION

SUBJECT: DOD Electronic Commerce Requirements, Systems, and Implementation Strategy Version 1.4

This document marks a milestone in the evolution of Electronic Commerce (EC). As we have struggled with understanding the requirements we have found that there are many systems and business processes involved in EC. Consequently, there are many differing strategies that need to be understood and made compatible and complementary. Version 1.4 of this document is the first step in documenting a baseline and in developing a consistent strategy to benefit all the stakeholders.

This document is the product of many people working together as a team to understand and confront the issues concerning the implementation of an EC infrastructure. It will be the document used, in conjunction with the Electronic Commerce Directive, to manage the evolving capabilities and opportunities that surface as we endeavor to make our government more efficient in this era of scarce resources.

Colleen A. Preston
Deputy Under Secretary of Defense
(Acquisition Reform)

#863

OUR COPY

Department of Defense Electronic Commerce (EC) Requirements, Systems, and Implementation Strategy

Version 1.4

#863

17 October 1996

Department of Defense Electronic Commerce (EC) Requirements, Systems, and Implementation Strategy
Version 1.4
Dated 17 October 1996

TABLE OF CONTENTS

Acknowledgements and Memorandum

1.0 EXECUTIVE SUMMARY

2.0 OVERVIEW

3.0 REQUIREMENTS

4.0 SYSTEMS BASELINE

5.0 STRATEGY

APPENDICES

Appendix A -DOD DUSD(AR/EC)
Appendix B -DOD Finance and Accounting
Appendix C -DOD Transportation
Appendix D -DOD Medical Logistics
Appendix E -DOD Procurement
Appendix F -DOD Logistics
Appendix G -DOD Agencies
Appendix H -Military Services
Appendix I -Federal Civilian Agencies
Appendix W -DISA Support Capability
Appendix X -Issues/Actions
Appendix Y -References
Appendix Z -Glossary

Downloadable Files

Cover, Foreword, and Sections 1, 2 secs1.zip.
Sections 3, 4, and 5 secs2.zip.
The Appendices apps.zip.

The above are WordPerfect© zipped files for downloading only. **Download instructions:** Create a subdirectory then download the files into subdirectory by selecting the file using your right mouse button if your left mouse button is the default. If your right mouse button is the default, use your left button. The prompt should be "save this link as" or "load to disk" where you can choose a directory to save it in. Use Winzip© or a similar program to unzip the zipped files.

Download Winzip© here.

For additional information contact:
Jim Mulder mulderj@ncr.disa.mil or
Audrey Lofton loftona@ncr.disa.mil

1.0 EXECUTIVE SUMMARY

Electronic Commerce (EC) is the paperless exchange of business information or ideas using Electronic Data Interchange (EDI), Electronic mail (E-Mail), electronic bulletin boards, Electronic Funds Transfer (EFT), and other similar technologies. EDI, a primary method of conducting EC, is the computer-to-computer exchange of business transaction information in a public standard format.

The federal vision of EC is a result of the President's direction that the implementation of electronic commerce be accelerated across the Executive Branch of the Federal government. The DOD vision of EC is to develop an electronic environment supported by a standard architecture for electronic commerce that enables execution of the national military strategy during peacetime, through mobilization, and warfighting sustainment. This will occur by implementing and integrating EC throughout the business processes of the Federal Government.

The purpose of the *DOD Electronic Commerce (EC) Requirements, Systems, and Implementation Strategy*document is to establish a common DOD EC vision by defining requirements, roles and responsibilities, and strategies for achieving a unified approach to EC implementation and operation. In addition, it serves to document the current and future capabilities of the Defense Information Systems Agency (DISA) to support the increasing EC workload through the Defense Information Infrastructure (DII). It is an evolving document that is intended to be updated periodically to identify changes in requirements and the strategies that need to be tailored to fulfill those requirements.

While this document focuses to a great extent on requirements, systems and implementation of functions that will be enhanced using EDI technology, it is important to recognize that DOD must also continue to develop an open, standards-based infrastructure capable of supporting all aspects of EC. One example of electronic business activity is the use of purchase cards and electronic catalogs on the World-Wide-Web (WWW). Another is posting government requirements (business opportunities) on the WWW, which capitalizes on the readily available commercial electronic forms technology and provides a "person-to-machine" interface for DOD contractors.

This document is a management tool to be used to describe the evolution of EC throughout the federal government. It identifies existing functional and infrastructure capabilities, issues and opportunities in support of implementing EC in the Federal government. It depicts the vision and current state of Federal EC, from both the DOD and civilian agency perspectives. It delineates, at a high level, the current and future requirements for EC implementations within DOD and civilian agencies. It characterizes the existing automated information systems (AISs) used by DOD and the civilian agencies that produce EDI transactions. It describes the DOD infrastructure put in place to support both DOD and the civilian agencies' EC requirements. It also describes a general and specific functional area strategy for improving EDI capabilities as well as the technical infrastructure needed to ensure optimal compatibility and co-existence throughout the federal government. Finally, it delineates the roles and responsibilities of the organizations involved in making EC and EDI a success in the federal government.

The information contained herein is available at multiple levels of detail from the high level overview contained in the executive summary to the general information in the body of the document and the detailed information contained in the appendices.

To ensure there is a common understanding of what is addressed in this document, and what is needed from the organizations that are participating in its development, the following definitions are provided:

Requirements- A description of the functional requirements for the infrastructure that will support the mission, goals, and objectives of the business communities that are or anticipate using EC.

System Baseline- The current capabilities of the infrastructure in place to support the EC activities that are a part of Federal government business processes.

Strategy- The result of the analysis of requirements and system baselines that identifies considerations and recommended actions necessary to transition functional processes, systems, applications, and delivery mechanisms to an EC environment that better supports changing missions, goals, and objectives.

In order to be effective, the overall strategy must address issues such as roles and responsibilities, the process used to approve and control EC implementations, priorities, funding, schedules, cooperative efforts, and standards. All of the participants in this program must work together to make it work in the most efficient manner.

The evolution of this document and the underlying strategy it represents depends, to a very significant extent, on the continuing inputs from all functional proponents of the Federal government that participate in EC. In addition to requirements, system baselines and strategies, the input of references to existing programs and documents (such as reports of working groups and action teams) will greatly enhance the effectiveness of this document. These inputs should identify the references and, if applicable, indicate available methods to access them, such as a WWW Uniform Resource Locator (URL) or an Internet File Transfer Protocol (FTP) address. They will be incorporated into Appendix Y of this document and be made available to the Federal community.

2.0 OVERVIEW

This section presents an introduction to the DOD EC implementation strategy. It describes the vision for EC from the DOD perspective, and the support DOD is providing the Civilian Agencies. It discusses the organization and planned evolution of the document as it matures into a complete and accurate representation of the future of EC in the Federal Government. It also sets the context within which this strategy addresses the issues and actions required to make full implementation a reality.

2.1 Purpose

The purpose of this document is to establish a common DOD EC vision by defining requirements, roles and responsibilities, and strategies for achieving a unified approach to EC and EDI implementation and operation.

It is designed to:

- Provide consolidated information on all DOD EC initiatives for use by customers, action officers, program managers, policy makers and commanders
- Define the roles, responsibilities and relationships of participants inEC and EDI
- Identify the core components of the DOD EC infrastructure
- Document migration and implementation paths for EC and EDI
- Identify the relationships and interdependencies of EC and EDI efforts across the DOD and within the Federal Government
- Document the integrated planning and implementation of EC and EDI efforts across the DOD to maximize the potential for savings, optimize the utilization of assigned resources and preclude duplication of efforts
- Describe initiatives to eliminate impediments to the realization of EC implementation
- Define the requirements and management of core DOD EC infrastructures, components. and initiatives

The draft DOD Directive on Electronic Commerce (8000.xxx) serves as high level guidance on EC from the Secretary of Defense. This strategy document defines, in more detail, how DOD organizations will support the Draft Directive and carry out its requirements. It represents a consolidated EC framework for the Military Services, Defense Agencies. OSD, Principal Staff Assistants and their functional communities, and will be updated based on their input. As the Principal Staff Assistant for EC, and representative of the DOD Executive Agent for Electronic Commerce [USD(A&T)], the Deputy Under Secretary of Defense (Acquisition Reform) [DUSD(AR)] will direct and oversee the joint efforts of the Director. DOD Electronic Commerce [DUSD-(AR/EC)] and the Deputy Director, Joint Requirements & Analysis (DISA-D7) in the execution of this strategy.

2.2 Background

Exhibit 2.1 summarizes the major events in the evolution of EC and EDI in the federal government. In the early 1960s, the DOD developed the Military Standards (MILS) system, undeniably the precursor to the EDI technologies that we employ today. In the early 1970s, the Transportation Data Coordinating Committee (TDCC) began the development of a new EDI standard, one that would support variable length records and be flexible to support multiple business uses. With leadership and resources primarily from the private sector, the American National Standards Institute (ANSI) X12 standard emerged in 1979 as the US national standard for EDI.

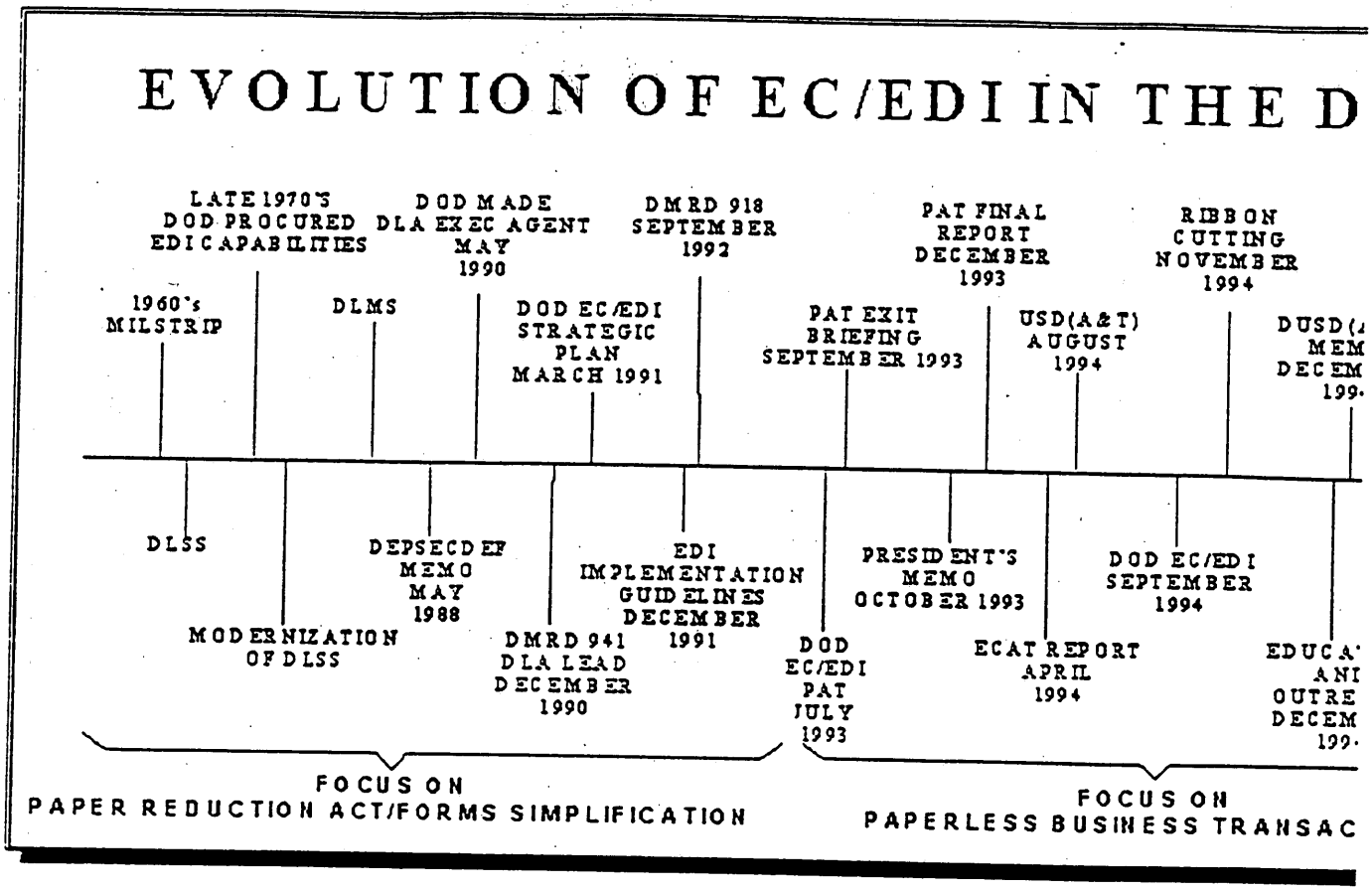

Exhibit 2.1 - Evolution of EC and EDI in the DOD

For many years, the DOD has advocated the use of EDI technology to improve its operations and the services provided to its customers. A 1988 Deputy Secretary of Defense memo, addressed to the military services and agencies, solicited maximum use of EDI, based on ten years of DOD EDI experiences.

In July 1993, the Deputy Under Secretary of Defense (Acquisition Reform) chartered the Electronic Commerce In Contracting (ECIC) Process Action Team (PAT) to conduct a bottom-up review of existing and ongoing use of EDI technologies in Defense procurement systems. The ECIC PAT, with representatives from across the DOD and advisors from Federal agencies and the private sector, developed an implementation plan for an integrated DOD-wide approach to ECIC.

In September 1993, the National Performance Review recommended that EC and EDI be expanded within the federal acquisition system.

In October 1993, President Clinton signed an Executive Memorandum directing the broad and rapid implementation of EC to support a full scale Federal EC system that expands initial capabilities to include electronic payments, document interchange, and Federal purchases.

The Congress, recognizing the potential for savings and process improvement in the Federal government, based on the experiences of the private sector and limited governmental use, required the implementation and use of EC and EDI for certain procurement actions in the Federal Acquisition Streamlining Act of 1994.

Because international trade is becoming increasingly common, the ANSI X12 Standards Committee has agreed to begin a gradual alignment with the United Nations EDI for Administration, Commerce and Transport(UN/EDIFACT) standards to ensure interoperability. This alignment will begin in 1997 and will lead to the achievement of a single global EDI standard.

2.3 Organization of the Strategy Document

This document is organized into five main sections and a series of appendices.

The Executive Summary provides a high level overview of the document, stressing the main ideas discussed, the important issues identified and major conclusions and recommendations offered in the document.

The Overview section discusses the purpose, background, and vision for EC within the Federal Government, the EC goal and objectives, the expected evolution of the document, and a short overview of EC and EDI with some terminology explained.

The Requirements section outlines a number of generic requirements that are common throughout most EDI implementations, includes a discussion of the process of identifying and gathering requirements, and includes references to specific functional requirements for initiatives that are planned or in progress.

The Systems Baseline section describes the scope of the DOD EC infrastructure and includes a discussion of how DISA has currently configured the Defense Information Infrastructure (DII) to support both the generic requirements and specific DOD and Civilian Agencies' EC requirements.

The Strategy section describes the roles and responsibilities of the various organizations that support and use EC and EDI technology. It also addresses the organization and process used to establish and support implementations, resource priorities and funding issues.

The appendices contain more detailed analyses of specific requirements for projects or initiatives that are planned or in progress. It is intended that user organizations will supply information on their projects. This will facilitate the capability of DISA to understand and respond to their requirements.

2.4 Electronic Commerce in Contracting Vision

At meeting on May 10, 1996 DUSD(AR), DISA, and Service and Agency senior contracting officials agreed on the DOD EC/EDI Vision Statement for contracting. That vision is to "Utilize Electronic Commerce to enable business process reengineering of <u>all</u> aspects of the acquisition process". This document sets the stage for all functional business areas to strive to meet that vision. The following assumptions, principles, goals and objectives will allow the fulfillment of this vision.

Exhibit 2.2 depicts the constantly evolving flow of transactions that represent the potential interoperability between Federal, State, and Local infrastructures and processes.

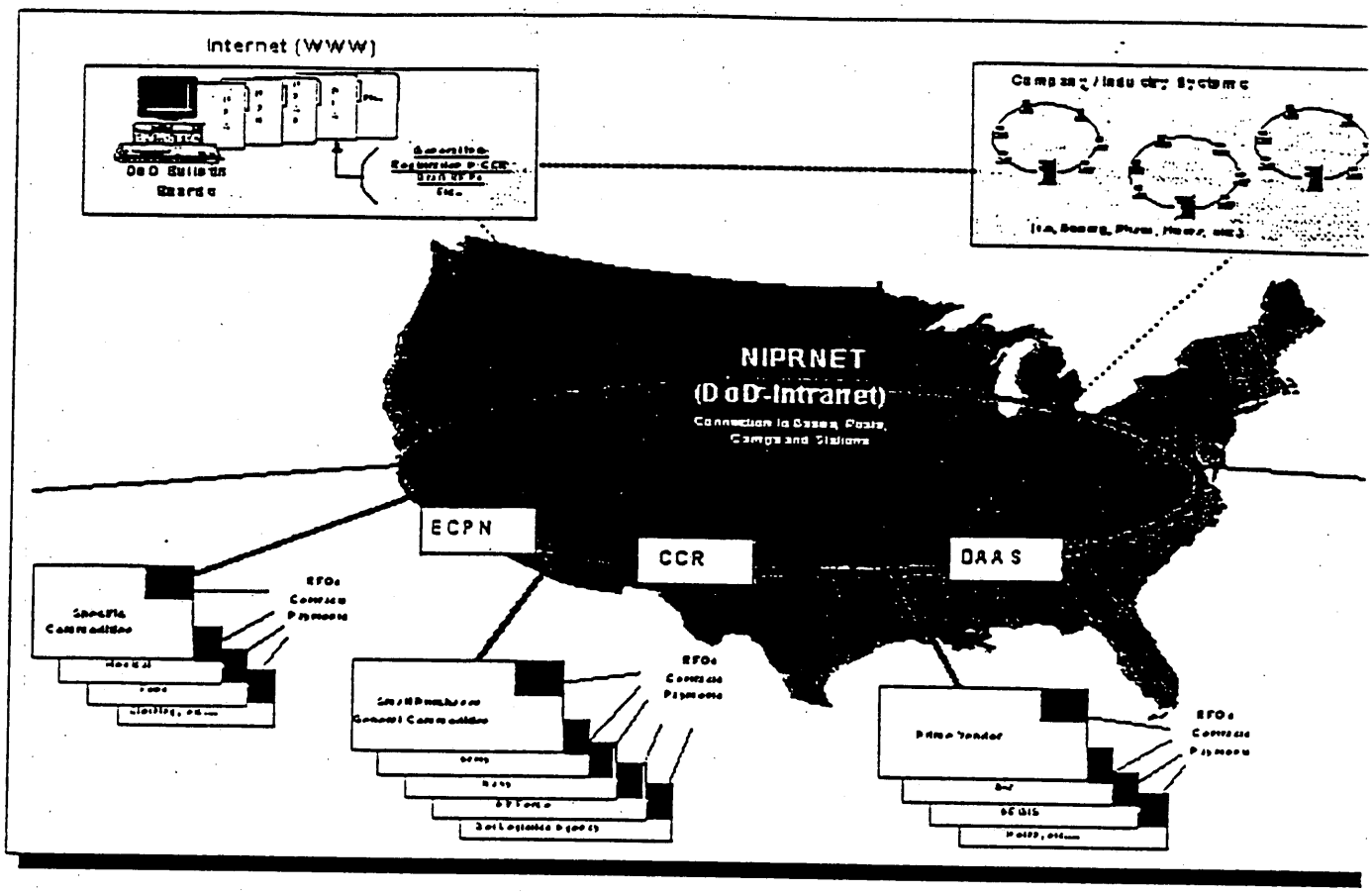

Exhibit 2.2 - EC Vision

2.4.1 Assumptions

As shown in Exhibit 2.3, the evolving EC infrastructure will support the flow of these transactions via a variety of paths. The following assumptions must guide the DOD EC Infrastructure and the use of it by all functional communities. Because the DOD Nonclassified Internet Protocol Router Network (NIPRNET) and Internet are interconnected, the Services and Agencies will have options to:

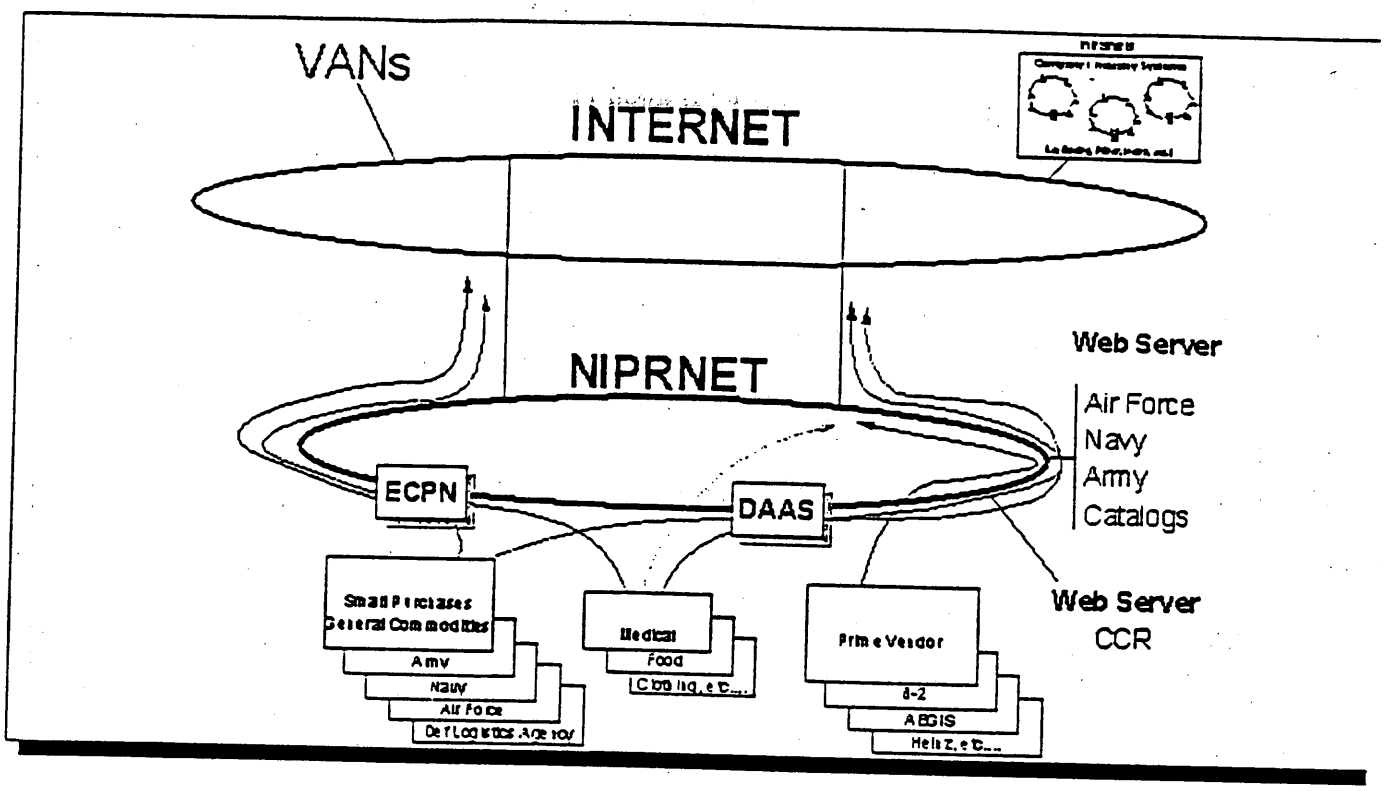

Exhibit 2.3 - Evolving EC Infrastructure

- Traverse the NIPRNET and make use of the Electronic Commerce Processing Node (ECPN) or the Defense Automated Addressing Systems Center (DAASC) to forward public procurements to DOD certified Value Added Networks (VANs)
- Traverse the NIPRNET and make use of the ECPN or the DAASC to forward directed procurements to DOD certified VANs
- Traverse the NIPRNET and forward directed procurements directly to DOD certified VANS through the Internet
- Use phones/circuits provided by DISN/FTS2000 and pass transactions directly to DOD certified VANs or trading partners
- Replace bulletin boards with WEB servers that are accessible through the NIPRNET and the Internet

2.4.2 Principles

The principles of the DOD EC and EDI program are to the maximum extent practicable:

- Utilize EC/EDI to enable business process reengineering. EC practices that impede business process reengineering or improvement should immediately be brought to the attention of the EC Executive Agent, who shall take immediate action to resolve any such issue
- Adopt no technical solution that will prevent utilization of new technology to accomplish EC/EDI
- Present a "Single face to industry" (one time entry into a system by a vendor) when soliciting vendors, requiring contractor registration and receiving certifications and representations
- Use the same data, without reentry, in all functional areas (e.g., Contracting, Financial, Transportation, Medical)
- Require no organization to transition to an EC architecture that does not meet or exceed the capabilities of any existing EC system being utilized by that organization
- Utilize the ANSI X12 standard for transacting business, migrating in the future to the UN EDIFACT standard

2.4.3 Goals

The goals of the DOD EC and EDI program are to:

- Establish a flexible, responsive infrastructure to meet current and emerging requirements & take advantage of new technologies
- Establish a Centralized Contractor Registration (CCR) capability to do business electronically with the Federal government including standardized Federal Electronic Commerce Acquisition Instructions (FECAI)
- Provide a standard method of implementing the national (ANSI X12) and international (UN/EDIFACT) EDI transaction formats to enable improved external and cross-functional information flow
- Modify existing legacy systems to be EC and EDI capable.
- Establish an Electronic Commerce Information Center (ECIC)
- Use the Acquisition Reform Communications Center (ARCC) for education and outreach
- Develop a supportive electronic funds transfer (EFT) architecture and use EFT as the principal method of payment
- Allow Federal contractors not using EDI to benefit from EC by accessing government requirements (business opportunities) through the World Wide Web (WWW).

2.4.4 Objectives

The objectives of the EC and EDI program are to:

- Improve efficiency and lower costs by simplifying and standardizing procedures for processing business transactions by reducing labor intensive manual actions
- Utilizing EC/EDI to enable BPR
- Reduce operating and administrative costs by decreasing or eliminating need for costly materials such as paper, envelopes, duplication and printing supplies
- Reduce labor costs by decreasing the amount of manual processing required to do business
- Increase reliability of transaction data by reducing manual input and human interpretation of data
- Reduce time required to prepare, process and transmit a business transaction
- Reduce costs by decreasing required inventory levels due to shorter acquisition lead-time
- Lower prices by expanding the pool of prospective bidders through wider dissemination of public Government procurement requirements
- Provide more comprehensive transaction history and status information for management decision makers by providing automated audit trails for events such as date/time receipt, success/failure, etc.
- Eliminate duplication of effort and resources by migrating to a centralized infrastructure which uses foundational DII assets, such as the Defense Information Systems Network (DISN) and the Defense Message System (DMS), as its backbone
- Eliminate the current Federal-wide manual and duplicative registration process for government contractors
- Provide a one-stop information resource for Government EC information
- Provide an institutionalized capability to educate and train the work force and trading partners on Federal EC
- Provide an interoperable electronic environment that reuses shareable data across functional areas

An important concept in implementing EC is the goal of achieving a "single face to industry." It means that the EC infrastructure must present a single interface to commercial trading partners. It provides an environment in which all Federal activities conducting EC use common transaction data standards and a common telecommunications backbone. To accomplish this:

- The CCR will provide a central repository of information on vendors necessary to conduct business with them. The information will be available throughout the Federal Government.
- A vendor will need to subscribe to only one of the many DOD-certified Value Added Networks (VANs) which provide trading partner connectivity to the infrastructure.
- The DISA Compliance Test Facility (CTF) will perform certification of a trading partner's

capability to comply with Federal Government EDI implementation conventions.

2.5 Definitions

There are many similar, yet differing, definitions of EDI and EC being used throughout the government and commercial communities, each seemingly tailored to fit the scope of the discussion at hand. The following definitions are taken from a document published by the Electronic Commerce Information Center (ECIC), *Your Introduction to Electronic Commerce*, and serve to align their meanings with the context of this document.

Electronic Commerce (EC)is the paperless exchange of business information (goods and services) or ideas using Electronic Data Interchange (EDI), Electronic mail (E-Mail), electronic bulletin boards, Electronic Funds Transfer (EFT), facsimile, video conference, and other similar technologies.

Electronic Data Interchange (EDI) is the computer-to-computer exchange of business transaction information in a public standard format.

While EDI and EFT are typically accomplished without human intervention or paper, other forms of EC usually involve human intervention and may or may not result in the generation of paper documents. For example, E-Mail can be created on-line and sent to someone. The recipient has the option to read it and respond on-line or print it. Another example is facsimile. Today's technology allows a user to create a document on-line, print it to a FAX modem, which transmits it to a receiving FAX modem. The recipient might print the FAX, but could also convert it to an electronic document and store it on disk. Regardless of whether paper is used at the beginning and/or end of the exchange, the exchange itself is accomplished electronically without paper.

As depicted in Exhibit 2.4, EDI is merely one component of Electronic Commerce - a tool that serves to enable EC. It will interface with the other components of EC via the Defense Message System (DMS). Using the Defense Information System Network (DISN) infrastructure, DMS will provide seamless messaging, directory, service management and security services.

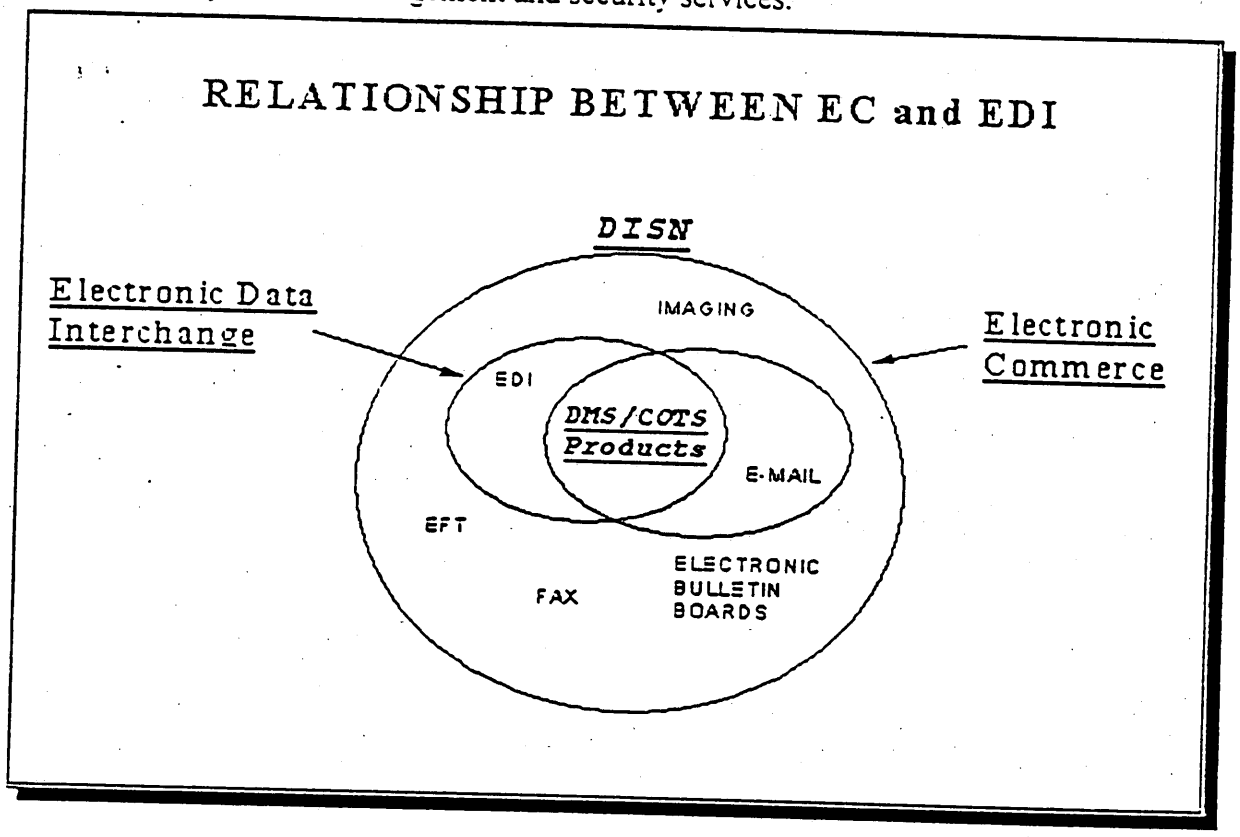

Exhibit 2.4 - Relationship Between EC and EDI

These are strict definitions in the sense that EC is 'paperless' and EDI is bound to a 'public standard.' Of course, while there exist a number of instances where information is exchanged electronically, much of this data exchange is done using proprietary formats that are not generally available to the public. This strategy for EC and EDI within DOD focuses on the migration toward using the American National Standards Institute (ANSI) Accredited Standards Committee (ASC) X12 EDI standard for all business transaction interfaces which analysis indicates benefit can be derived, both internally within DOD, and externally with other governmental agencies as well as the commercial sector. The strategy also recognizes that the international standard UN/EDIFACT is used by some Federal agencies and the U.S. X12 standard is expected to be aligned with it in the relatively near future. DOD will support the standard appropriate to the using activities that it is supporting. In the remainder of this document the term X12 will be used to imply whatever standard is appropriate for the implementation.

The following definitions are the foundation for the basic understanding of EDI concepts.

Trading Partners- Entities who exchange business transactions.

Trading Partner (External)- A non-Federal Government entity with whom the Federal Government exchanges business transactions.

Trading Partner (Internal)- A Federal Government entity who exchanges business transactions with another Federal Government entity.

Transaction Set- A semantically meaningful unit of transaction information exchanged between EDI trading partners. It can be thought of as the electronic counterpart of a paper document that represents a transaction, e.g., an invoice, a bill of lading, or a medical insurance statement.

Transaction - All of the business information contained in a transaction set.

Public Transaction- A transaction that, rather than being sent to one trading partner, is broadcasted to a predefined group of trading partners. Alternatively, a transaction that is made available to any trading partner by being placed in a publicly accessible media, such as an electronic bulletin board, for downloading.

Implementation Convention- A subset of the X12 standard that represents the common practices and/or interpretations of the use of X12 standards. Conventions define how trading partners will use the standards to accommodate their mutual needs.

DOD EC and EDI Infrastructure- A subset of the DII that is designed to support EC and EDI. It is composed of hardware, software and people. It provides services such as translation, archiving, distribution, and result notification. It supports all DOD EC and EDI functional activities as well as other civilian agencies that may need to use it.

FACNET- Federal Acquisition Network was created by Section 9001, Federal acquisition Streamlining Act of 1994, Pub. L. 103-355, Oct. 13, 1994, 41 USC 426. FACNET is defined as: the Government wide Electronic Commerce/Electronic Data Interchange (EC/EDI) systems architecture for the acquisition of supplies and services that provides for electronic data interchange of acquisition information between the Government and the private sector, employs nationally and internationally recognized data formats, and provides universal user access. FAR 4.501
Interim FACNET means a contracting office has been certified as having implemented a capability to provide widespread public notice of, issue solicitations, and receive responses to solicitations and associated requests for information through FACNET. Such capability must allow the private sector to access notices of solicitations, access and review solicitations, and respond to solicitations.
FACNET is not a specific system but rather a series of capabilities. For procurements at or below the Simplified Acquisition Treshold, a contracting activity using an Interim FACNET certified system is exempted from the requirement of posting or synopsis in the Commerce Business Daily (CBD) as

indicated in FAR 5.202 (a) (13) and the waiting periods required before award or issuance of the solicitation.

Exhibit 2.5 identifies some of the EDI components in a cross-functional implementation of EDI and represents a conceptual example of the vision for EDI in DOD. This example integrates the procurement and finance functions by passing X12 transactions among the various cross-functional components as well as the external commercial entities involved in the process of acquiring goods and services. The example shows the entire process beginning with a requisition and ending with payment to the vendor. Internal to each of these activities are computers running functional applications that send and receive the electronic transactions automatically. In this scenario, approvals and authentications are routinely done on-line by functional specialists

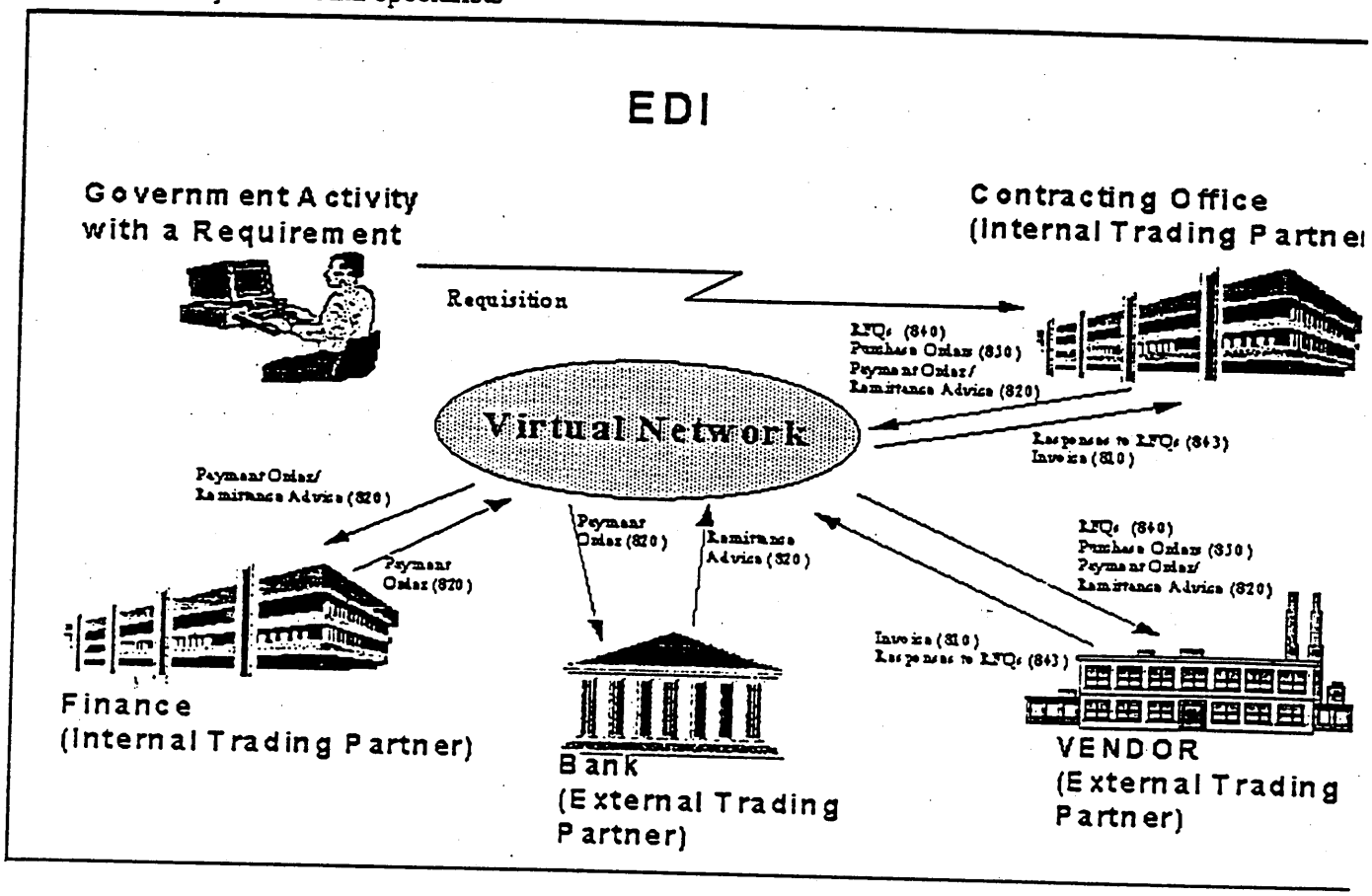

Exhibit 2.5 - EDI Example

and paper is used only for reports and exception processing. The Virtual Network represents whatever media is used to facilitate data exchange without specifying any particular type of network. Note that X12 820 transactions are designed to be used as a payment order or remittance advice or both, depending on the roles of the parties exchanging them.

2.6 Document Evolution

Section 2.6 provides a high level description of this document and the anticipated content for following versions. Version 1.0 contains the near-term strategy, Version 2.0 will contain the near-term strategy and the mid-term strategy, Version 3.0 will contain the near-term, mid-term and long-term strategies. Exhibit 2.6 shows the schedule for developing the three versions of this document as well as their general scope of contents. It also indicates the extent of time coverage for each version.

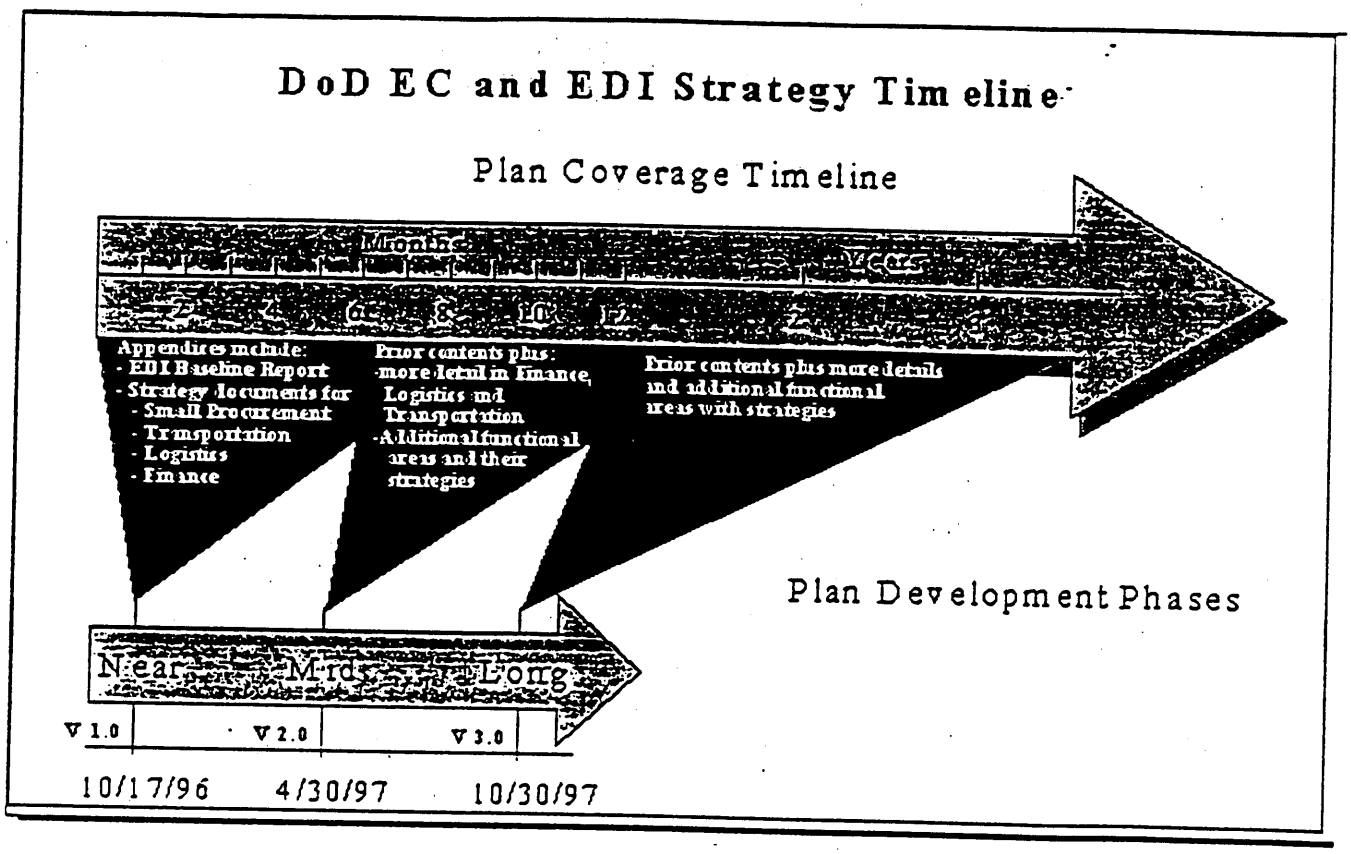

Exhibit 2.6 -DOD EC and EDI Strategy Timeline

The version dates and contents are described below:

- 17 October 1996 -V 1.0
  Appendices will include the detailed EDI Baseline, and Strategy documents for DLA, Finance and Accounting, Transportation, DOD Small Procurement, Medical Logistics and the Federal Agencies as provided by the functional community.

- 31 April 1997 -V 2.0
  Prior contents plus more detail for DLA, DFAS and Transportation. additional functional areas, and their strategies.

- 30 October 1997 -V 3.0
  Information from V2.0 plus more details and additional functional areas with strategies.

Table of Contents | D7 Home Page | rieschev@ncr.disa.mil
Last update 24 October 1996 vr

3.0 REQUIREMENTS

This section identifies the infrastructure characteristics that are normally required in an EC and EDI implementation and describes elements which need to be elaborated during program or project definition. It introduces a process which can be used to ensure the business requirements are identified, recorded, and satisfied.It refers the reader to documents of specific EC and EDI projects for which requirements are known or being developed.

The existing Defense Information Infrastructure (DII) satisfies many of the requirements for moving electronic transactions between trading partners. There are, however, specific required features that are not currently identified or supported by DII. This document encourages the contribution of information from readers to assist in the identification of additional features required to conduct EC.

3.1 EC and EDI Infrastructure Requirements

The initial requirements for EC and EDI are derived from the DOD Electronic Commerce in Contracting (ECIC) Process Action Team (PAT) Report and the Federal Streamlining Acquisition through Electronic Commerce PAT Reports. The following basic requirements apply to the Federal EC and EDI support infrastructure:

Functionality - The infrastructure must be capable of supporting the following functions required to process and transmit transactions electronically:

- Translation of user defined files into X12 transactions and decode X12 transactions
- Distribution, receipt, and routing of transactions to and from AISs, certified Value Added Networks (VANs), and other entities as required
- Supporting special purpose VANs or companies acting as their own VANS and interfacing with a limited community of interest
- Providing directory services required to route transactions
- Validation of trading partner information
- Compliance testing
- Acknowledgment of unsuccessful processing
- Archiving of data
- Provide for accounting and billingservices
- Provide for query and trouble reporting capability

Central Contractor Registration- The infrastructure must provide a fully operational capability for commercial trading partners to register to do business with all agencies and departments of the Federal Government on a one-time basis.

Backup Capability - The infrastructure must be robust enough to recover from problems. to include total failure of an infrastructure processing site or transmission component. It must:

- Provide archival services required to ensure data recoverability in case of hardware or software problems.
- Provide Continuity of Operations (COOP) capability to reroute transaction workload during standdown of an infrastructure processing node or communication channel.

Security - The infrastructure must provide security services that will:

- Provide procedures and mechanisms to ensure security equal to or greater than that currently afforded to transactions in the non-EC environment. This includes maintaining the integrity of the data contained within the transaction as well as safeguarding the data against disclosure to unauthorized parties. Alteration. deletion. or addition of any part of the original transaction should not be allowed, but must be detectable if it occurs.

- Provide procedures and mechanisms to protect infrastructure hardware, software, and data from tampering or unauthorized access.
- Provide procedures and mechanisms to positively identify the transaction originator and recipient. Misrepresentation of the originating/receiving party must be detectable.

Developmental Testing Support- The infrastructure must have the capacity to support the testing of new implementations and prototype developments while preventing interference with production operations.

End-to-End Reliability - Infrastructure users must be assured that their transactions will be delivered to the intended recipients. The infrastructure must include procedures and mechanisms for notifying users of undeliverable transactions (e.g., unidentifiable address).

Auditability - The infrastructure must provide a transaction audit trail which allows infrastructure operators to follow the status of a transaction as it traverses the infrastructure and to reconstruct the times of transaction events after a transaction has exited the infrastructure.

Scalability - The infrastructure's architecture will be scaleable to facilitate rapid expansion in order to accommodate additional transaction workload.

Use of DII Components - The infrastructure must make maximum use of existing and emerging components of the Defense Information Infrastructure.

Use of Off-The-Shelf Products - The infrastructure must make maximum use of Commercial-Off-The-Shelf (COTS) software and reusable Government-Off-The-Shelf (GOTS) software products that have been tested, accepted, and are configurable and/or supportable by the Government.

Data Conventions- The infrastructure will only transmit Federal Government-approved implementation conventions which are based on X12 and/or EDIFACT standards.

3.2 Requirements Identification Process

The Framework for DII Integration, shown in exhibit 3.1, is a methodology for handling a wide variety of DISA requirements. DISA's customer (or "user") organizations generate the majority of DISA program requirements. The DII receives and implements these requirements. The Requirements Process and its supporting tools structure is the mechanism by which user needs are integrated into DII programs.

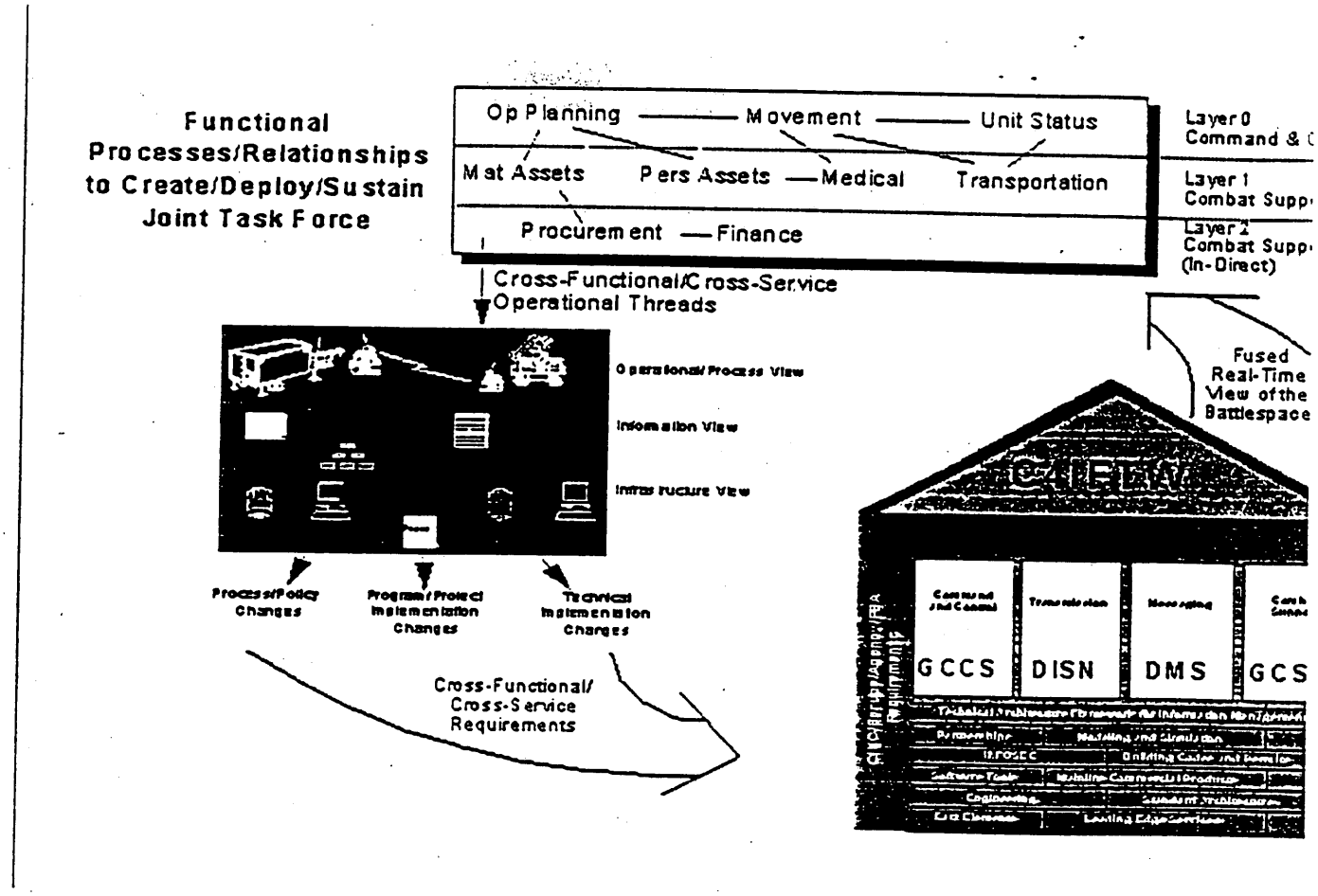

Exhibit 3.1 - Framework for DII Integration

DISA requirements are typically identified by three sources: (1) DISA D7 Integration Managers;(2) DISA Customer Representatives assigned to DISA Directorates other than DISA D7; and (3) Cross-Functional Requirements resulting from maturation of the System Interface/Data Exchange(SI/DE) and the identification of Base Level Interfaces to CINC/Service and Global Command and Control System (GCCS)/Global Combat Support System (GCSS) programs. The process tracks the evaluation, documentation, and disposition of requirements identified by the three sources.

3.3 Requirements Process

The general EC and EDI infrastructure characteristics described above will be analyzed in the context of DISA's current and future capability to meet specific requirements of the Federal user community. The user requirements collected are presented in the appendices to this document. As part of document evolution additional requirements will be collected and the appendices will be updated.

Section 4.1 focuses on the current DOD EC and EDI infrastructure, maintained by DISA, with the intent to baseline the infrastructure's functional and technical support capacity. Based on that capacity versus the required capacity, the implementation strategy will be developed. Issues and recommended actions will also be developed and maintained in Appendix X. They will be organized in a manner that permits tracking the actions.

3.4 Specific Project Requirements

The purpose of this paragraph is to provide references to specific EC and EDI projects for which requirements are known or being developed.For each project mentioned here, there will be an appendix containing a short summary of the project. The reader can use that and the referenced requirements document to understand the full scope of the project. The reason for this format is to provide a

consolidated summary of requirements while avoiding duplication of the details of any particular project's requirement. As projects are identified, they will be analyzed by DISA and folded into the appropriate appendix.

It should be emphasized that this document is the result of the contributions of the entire DOD and Federal community and comments and suggestions are welcomed from all. This is especially true of the appendices, which should describe the EDI initiatives from the viewpoint of the respective Principal Staff Assistant (PSA), military service/agency or federal agency.

3.4.1 DOD DUSD(AR/EC)

Use of EC/EDI to support DOD procurement processes for amounts of $25K to $100K has been under consideration for some time. The Deputy Under Secretary of Defense (Acquisition Reform) established a Process Action Team (PAT) to assess current contracting capabilities in the DOD EC and EDI infrastructure. The PAT was tasked to develop a comprehensive plan for implementing an EC approach for procurement functions that was consistent with X12 standards, integrated DOD-wide, provided the greatest capability within 2 years and identified relevant policy issues.

In line with the PAT report, DOD identified the organizations that participate in the procurement process, determined the types and quantities of business transactions exchanged and formulated a plan to migrate these transactions to the new standard X12. At the same time, DISA must assure that the common infrastructure for moving these procurement transactions is able to handle the predicted volumes within the required time frame with positive confirmation of transaction receipt.More details can be found in Appendix A to this document.

3.4.2 DOD Finance and Accounting - Unmatched Disbursements

In early 1994, a working group was established to study the problem of unmatched disbursements within DOD. This resulted in a report, *Eliminating Unmatched Disbursements - A Combined Approach*, containing many recommendations. Several of these recommendations involved using EDI to improve the situation. The Defense Accounting and Finance Service (DFAS) is currently implementing the finalized recommendations, the EDI portion of which is to be supported by the EDI portion of the DII. The requirements that have been developed are being documented in a DISA report, *DFAS Eliminating Unmatched Disbursements - Functional Requirements Document*, sponsored by DISA-D7. A more detailed summary of this project can be found in Appendix B to this document.

3.4.3 DOD Transportation

The report *Defense Transportation Electronic Data Interchange Implementation Plan*, 4 June 1996, prescribes an aggressive program to accelerate the pace of EDI implementation in support of transportation. This plan is aimed at focusing energy, attention and resources toward expanding EDI uses in support of DOD transportation business information exchanges. It identifies basic requirements for the use of EDI in support of DOD transportation in addition to detailing the current EDI initiatives. A more detailed summary of this program can be found in Appendix C to this document.

3.4.4 DOD Medical Logistics

Medical logistics is a function within the Military Health Services System (MHSS), a worldwide organization composed of the health resources of DOD, Army, Navy, and Air Force. The information required for MHSS covers a diverse range of peacetime and war-related areas including coordinated and managed care, preventive medicine, research, and logistics. Medical logistics supports the MHSS health care delivery mission by furnishing matériel, equipment facilities, services and information resources essential to patient care in both peacetime and wartime.

The Defense Medical Logistics Standard Support (DMLSS) Program is responsible for defining and implementing an efficient medical logistics support environment for health care operations in peacetime, military operations other than war, and wartime. The program is composed of two major components:

(1) development of automated information systems (AIS) to streamline, enhance, and automate medical logistics functions and (2) application of the Medical Logistical Process Improvement Program (MLFPIP), which identifies and implements improvement opportunities associated with the business practices and processes of medical logistics.A more detailed summary of this function's programs can be found in Appendix D to this document.

3.4.5 DOD Procurement

The military departments, defense agencies, and their components have developed processes and business practices, including approximately 76 unique AISs, to perform their procurement missions.

The Director, Defense Procurement, recognizing the inefficiencies and costs associated with sustaining existing automated and non-automated procurement systems, established the Standard Procurement System (SPS) Program. The SPS Program is iterative and provides the capabilities and deployment times phased to correspond with user needs and budgets. For EC/EDI purposes, the key elements of the SPS are:

- a commercial software application that will perform standardized procurement functions,
- standard procurement data developed in conjunction with DOD Enterprise data standardization effort,
- a shared data warehouse that will permit receipt and distribution of standardized procurement data,
- and the DOD Defense Information Infrastructure(DII).

A more detailed summary of this function's programs can be found in Appendix E of this document.

3.4.6 DOD Logistics

3.4.7 DOD Agencies

3.4.7.1 DLA

3.4.7.2 DeCA

3.4.8 Military Services

3.4.8.1 Army

3.4.8.2 Navy

3.4.8.3 Air Force

The United States Air Force Electronic Commerce/Electronic Data Interchange Strategy, 12 July 1995, describes the Air Force vision, goals, and strategies for EC. The Air Force has embraced EC as a way to improve quality and reduce cost of operations well into the next century. The Air Force has several efforts underway. A detailed summary of these initiatives can be found in Appendix H of Version 2 of this document.

3.4.8.4 Marine Corps

3.4.9 Federal Civilian Agencies

3.4.9.1 Federal Procurement

4.0 SYSTEMS BASELINE

The section provides a high level description of the EC and EDI infrastructure maintained by DISA. It is not meant to be an inventory of systems, but to identify what EC support is available to users in the Federal Government.

The first step in expanding EC within the Federal Government is to determine the current use of the infrastructure in major functional areas. This assessment is used as a starting point for a continuing EC strategy. The baseline provides sufficient detail to allow informed decisions for expanded EC support to the DOD mission and the warfighter.

Most of the current EDI support provided by DISA is in small procurement, where there are already several military and civilian activities that are conducting business using the infrastructure in various degrees of volume. It is imperative that current and planned use of EDI by these organizations be documented so that adequate future support can be planned and provided.

DISA also provides other EC support in the form of World Wide Web (WWW) Home Pages, accessible via the DOD Nonclassified Internet Protocol Router Network(NIPRNET) and the Internet. This support now includes information related to policy, direction and general topics. This strategy document is available in electronic format. Appendix Y to this document lists many related reports and other documents and how to obtain them. Readers are encouraged to provide additional information regarding on-line documents. Other EC support includes the on-line trading partner registration capability being built into the Central Contractor Registration (CCR) system.

Overall, the documented EC and EDI baseline indicates that more functional integration is needed in order to fully meet the requirements for DOD mission support and for the warfighting communities. The lack of full integration causes redundancies and duplications that increase the cost of operations, thereby reducing the resources available for the DOD warfighting mission. However, several EDI efforts have been initiated within DOD to provide cross-functional integration within the Defense Finance and Accounting Service (DFAS), the Defense Logistics Agency (DLA), and Transportation.

The remainder of this section provides the baseline of the DII's capability to support the EDI portion of EC.

4.1 EC and EDI Infrastructure Scope

The DOD EC and EDI infrastructure that has been implemented is comprised of hardware, software, communications, policy, procedures, and personnel to enable the processing and transmission of business transactions between trading partners. The body of standards governing EDI transactions is also included. The key components of this infrastructure are illustrated in Exhibit 4.1 below. The flow of transactions from a DOD Automated Information System (AIS) to a trading partner (TP) is also shown.

Network Entry Points (NEPs) are where electronic transactions are passed from the gateways to the Value Added Networks (VANs) for issue to the trading partners. Gateways (GWs) represent a front-end process to the AIS platform. VANs are commercial entities in the business of distributing electronic transactions to an internationally spread customer base. The DISA Compliance Test Facility (CTF) conducts testing to confirm that the EDI output files are compliant with appropriate standards and Federal EDI implementation conventions. Trading Partners must successfully complete the testing requirements and the EDI registration process to become a trading partner and exchange transactions with any Civilian or DOD activity. DUSD(AR) has established CCR to provide a single point where all vendors register with the Government. The Customer Service Center (CSC) is where all EC and EDI functional, technical, configuration and software questions and/or problems are answered/resolved.

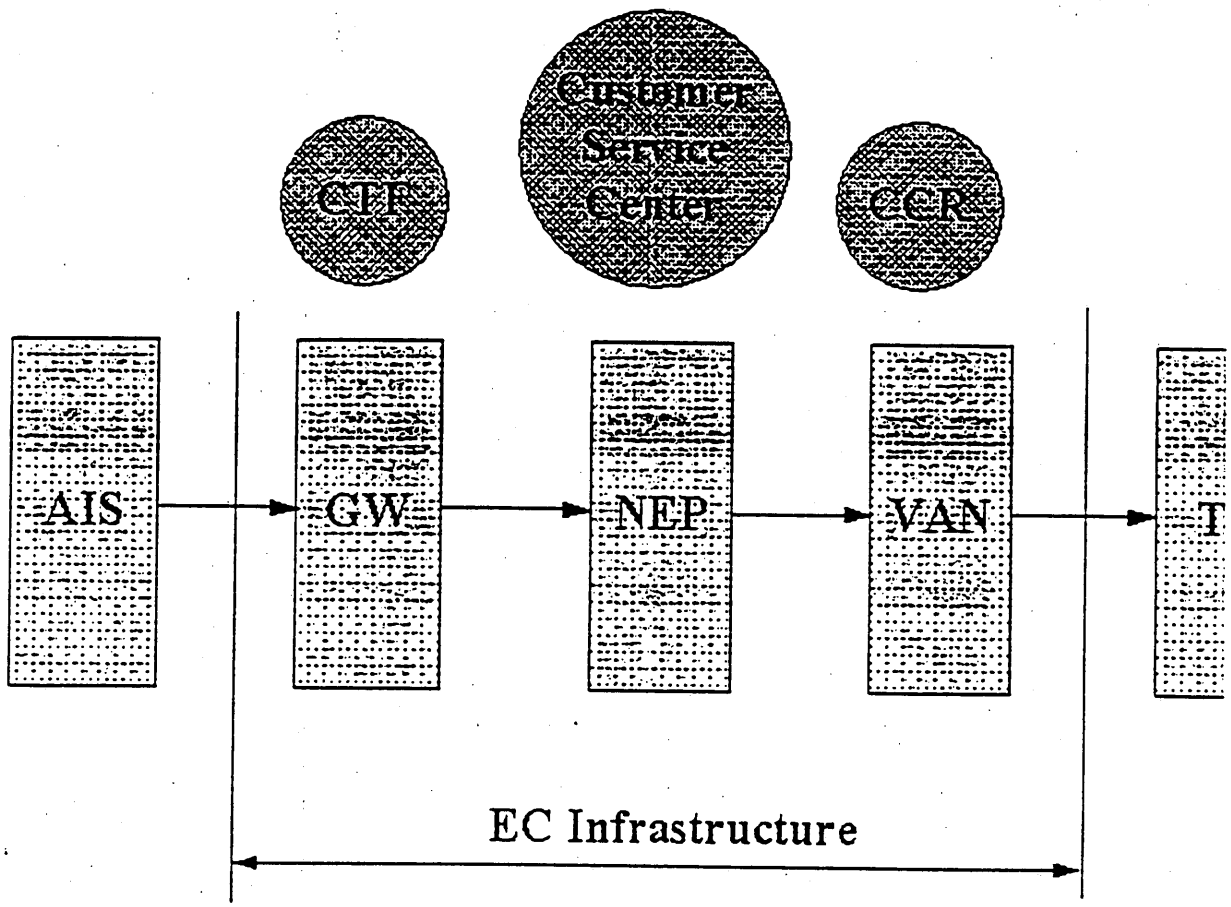

Exhibit 4.1 - Boundry of EC Infrastructure

NEPs, GWs, the CCR, and the CSC are in most cases located in Defense Megacenters. The network connecting EC and EDI components is the NIPRNET. The DISA-managed EC program provides funding for the operation, maintenance, and upgradeof EC-dedicated resources in the Defense Megacenters. Note that the EC infrastructure managed by DISA does not include connectivity between GWs and AISs, connectivity between VANs and trading partners, or the AISs.

The EC and EDI strategy extends to all participants in Federal procurement. Exhibit 4.2 depicts the many elements at the Federal, Defense and commercial levels. Federal EC and EDI is composed of four layers: Federal Civilian, Defense, the EC Infrastructure, and the commercial segment with which the Government does business.

In the center lies the Executive Branch and Federal Civilian Agencies which issue Executive Orders, formulate policy and create regulations. Also included are the agencies that need to do business, both commercial and inter-governmental. Note that EC policy making and regulating are functions that overlap into the Defense layer.

The Defense layer represents the rest of the Government's business oriented organizations. EC interactions with the commercial sector rely on and pass through the EC Infrastructure, which is operated and maintained by the Defense Information Systems Agency. The EC Infrastructure includes CCR, CTF, Application Programming Interfaces (API), Electronic Commerce Processing Nodes (ECPN), Continuity of Operations (COOP) services, and the Defense Information Systems Network (DISN).

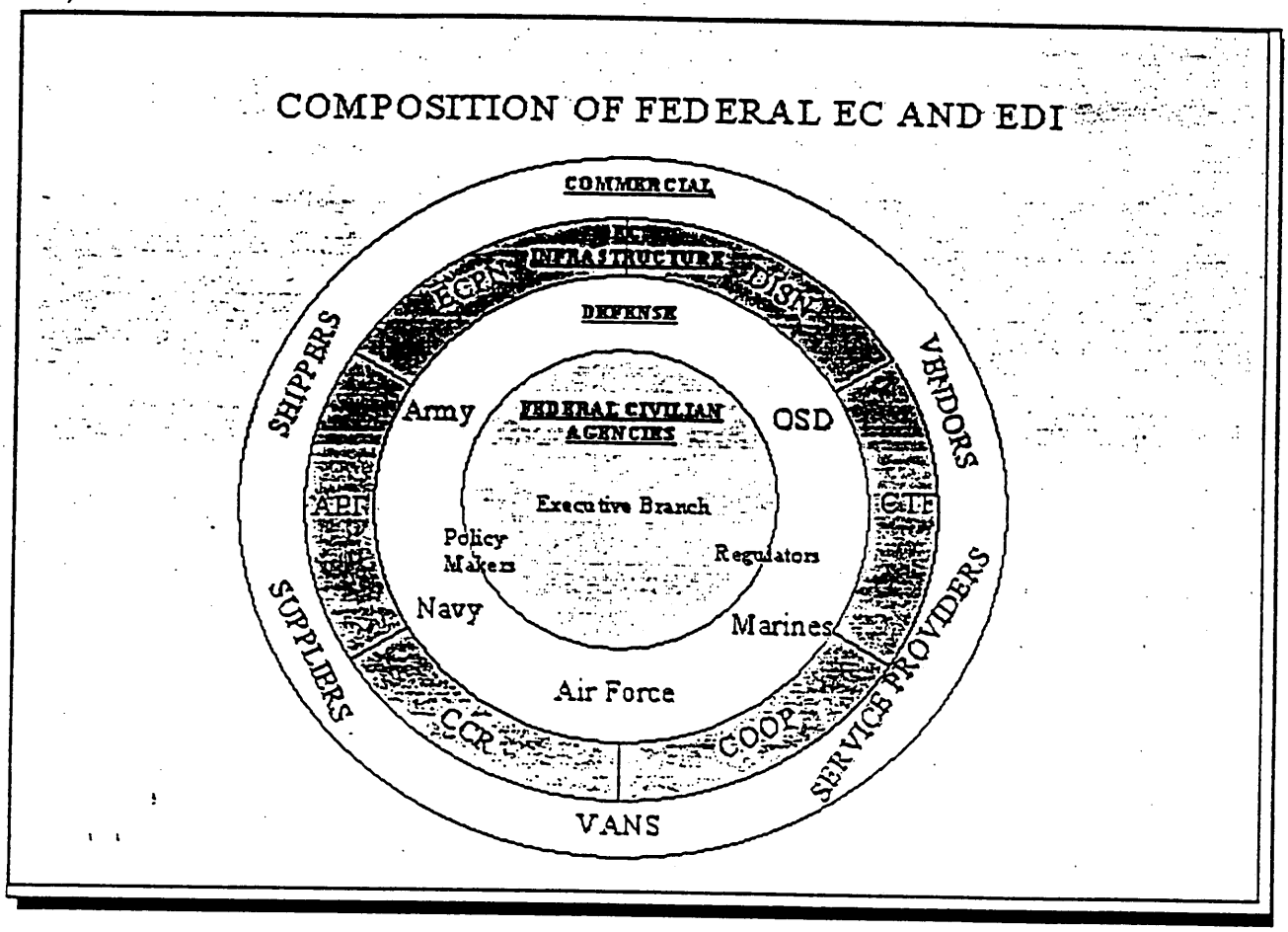

Exhibit 4.2 - Composition of Federal EC and EDI

The overall Command Control Communications Computers Intelligence for the Warrior (C4IFTW) EC and EDI strategy makes use of the centralized network services provided by the Defense Information Infrastructure (DII), rather than by building its own network infrastructure. The DII is described in detail in the DISA document *DII Master Plan, Version 4.0*, dated 26 April 1996. C4I supports the Global Combat Support System (GCSS) initiative. This initiative provides a common foundation for coexistence and integration of automated information systems to provide combat support. The primary function of GCSS is to prepare common components of the infrastructure so that the Central Design Activities (CDA) can develop systems that successfully interface with the common infrastructure.

To meet the timelines established by the DOD and Federal EC Process Action Teams, DISA used existing assets to rapidly deploy an initial DOD infrastructure by March 1994. On 30 June 1995, the infrastructure was upgraded to increase processing capacity and improve speed-of-service. This infrastructure is illustrated in Exhibit 4.3.

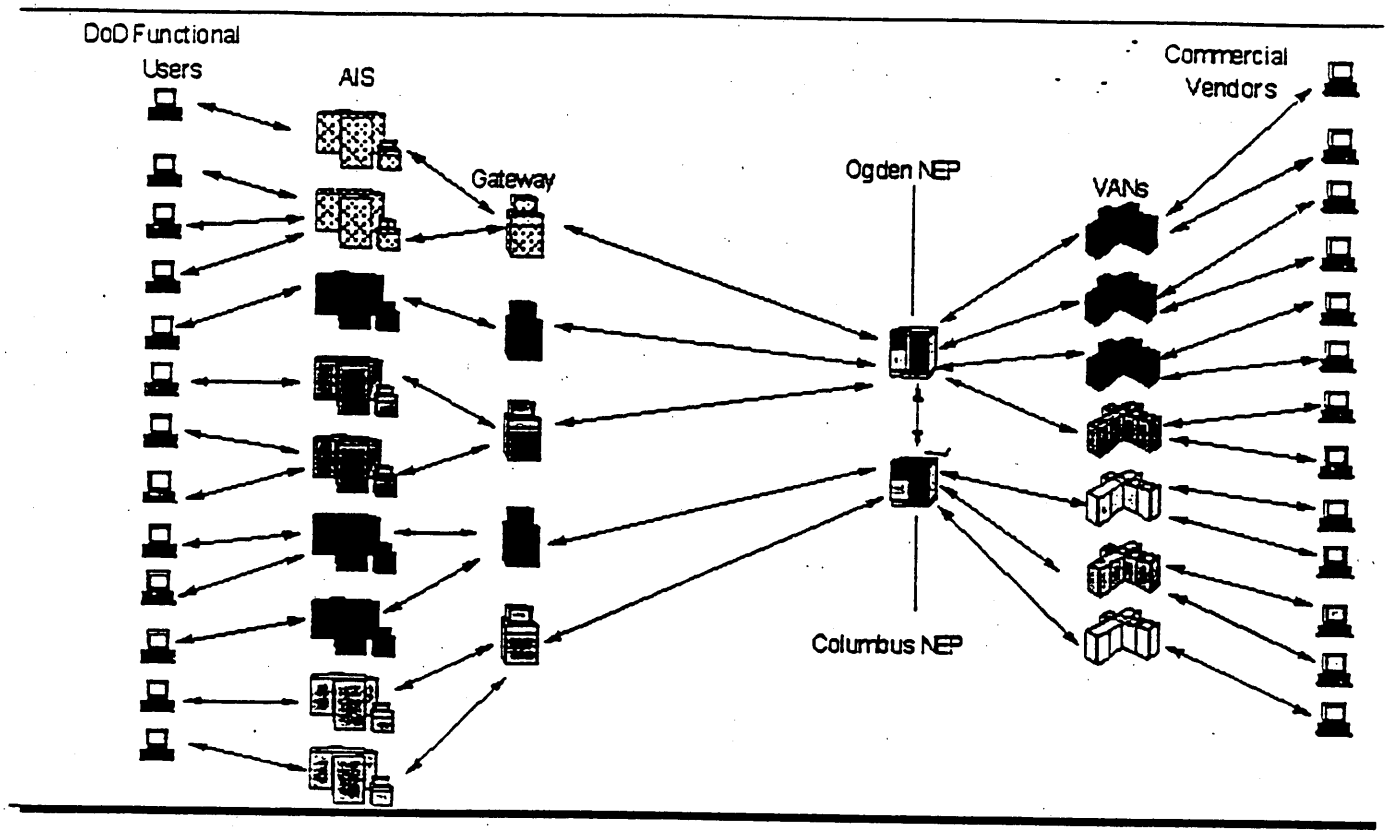

Exhibit 4.3 - Current DISA EC/EDI Infrastructure

4.2 Current Capabilities Baseline

The basic EC and EDI requirements were identified in Section 3. As more specific user requirements are identified and documented in the appendices, a detailed picture of required capabilities can be drawn. "Specific requirements" means data such as transaction sets, volumes, frequency, timeliness, backup, and security.

4.2.1 Functionality

The NEP and Gateway systems (and eventually Version 1 of the ECPN) maintained by DISA satisfy all of the functionality requirements stated in section 3.1 with the exception of accounting and billing, and directory services. DISA is in the process of developing a fee for service structure to include accounting and billing. DISA is also examining several alternatives that will provide interoperable end-to-end directory services (Defense Messaging System (DMS), ECPN, Defense Megacenter (DMC), DISN, etc.).

ECPN is the result of combining gateway and NEP functions into a single environment. New hardware and software for this new functionality is being fielded and tested at DMC Ogden, DMC Columbus and the DISA COOP and Test Facility (DCTF)in Slidell, LA. CCR functionality will be integrated into the ECPN as it matures and will eventually provide the needed directory services.

4.2.2 Central Contractor Registration

Central Contractor Registration is one of several major activities that allow the Federal Government to present a single face to industry. Begun in September, 1994, its development is in two phases. Phase I identified initial functional requirements and the database structure, and provided a capability to perform initial data validation. Phase II will add several enhancements, including more robust data validation, EDI transactions (X12 824, 838 and 997), audit and administrative functions, and interface software that permits on-line registration and queries. Exhibit 4.4 depicts the current CCR registration and validation

activities.

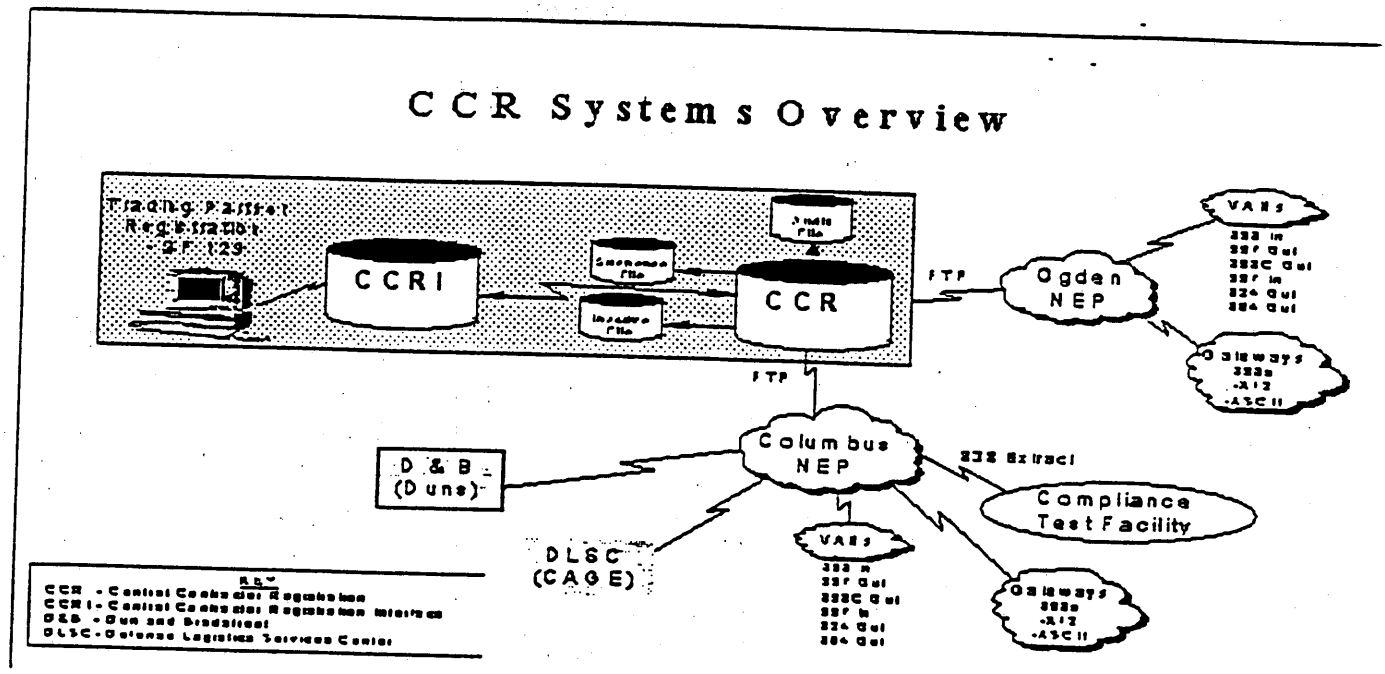

Exhibit 4.4 - CCR as of March 1996

Today, on-line registration is provided by electronically filling in Standard Form 129 and queries can be done only by system administration personnel. For the remainder of Phase II, the on-line registration will be enhanced to allow an X12 838 transaction to be processed; a capability for Government and non-Government users to query the system will be added; and an interface to Standard Industrial Classification Code and Contractor Performance File databases will be developed. Exhibit 4.5 depicts the CCR when Phase II enhancements have been implemented.

In the future, further enhancements are being planned to increase the timeliness of validation, improve accessibility (possibly via the WWW), and improve the usefulness of the CCR by interfacing with Federal procurement offices and other Federal contracting activities.

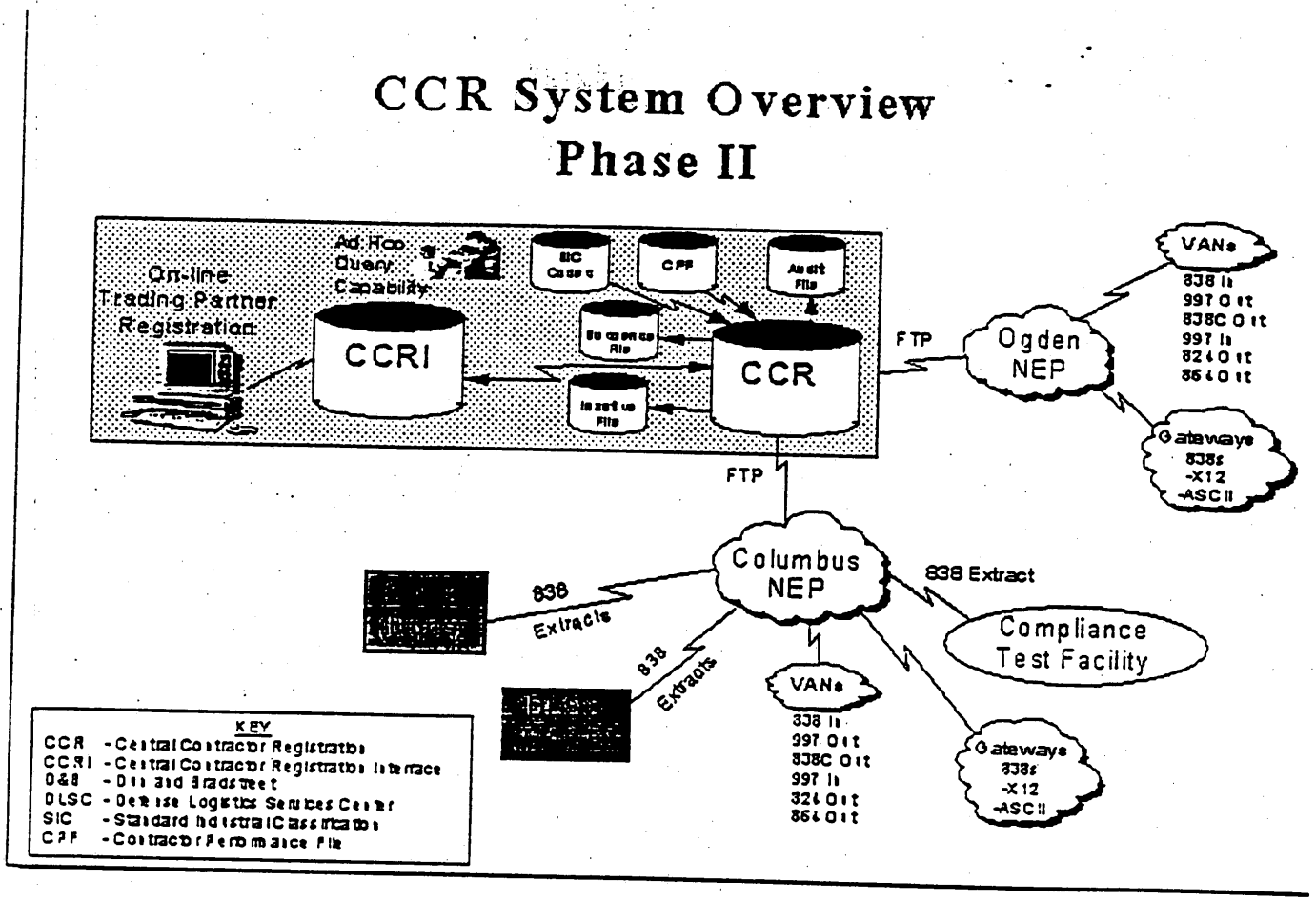

Exhibit 4.5 - CCR upon Completion of Phase II Development

4.2.3 Backup Capability

The ECPNs maintained by DISA will satisfy all of the stated backup requirements. Exhibit 4-6 depicts the EC Infrastructure for production processing and backup processing (COOP) that will be available by the beginning of FY97. COOP processing will be performed at the DISA COOP and Test Facility (DCTF) when required. Prior to this, the EC Infrastructure will consist of a combination of both the old (NEPs and Gateways) and new (ECPN) infrastructures and a development environment, the Operational Support Facility (OSF) Development Center, that will also be used to support backup processing.

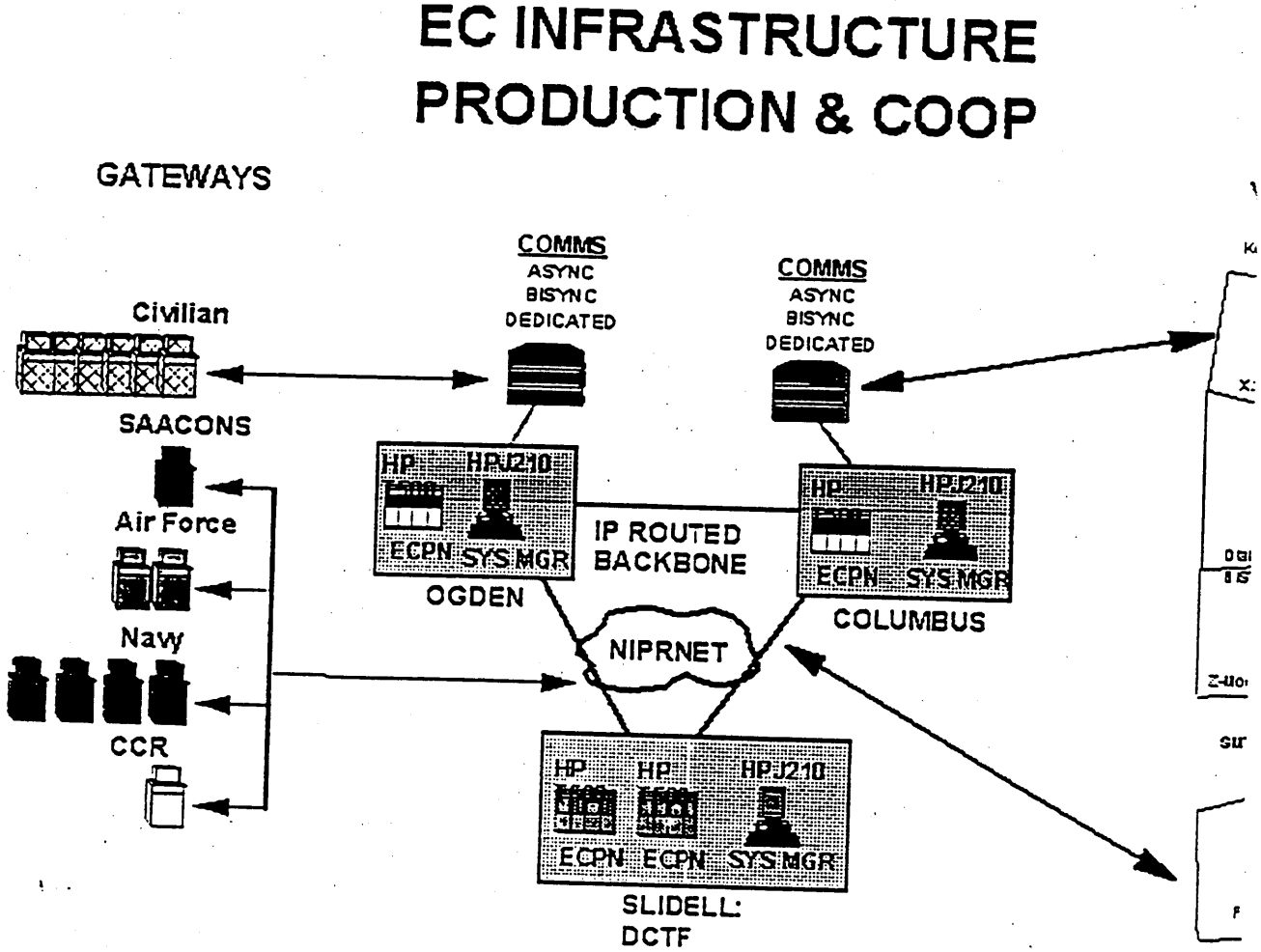

Exhibit 4.6 - EC Infrastructure

4.2.4 Security

4.2.5 Developmental Testing Support

Currently the OSF Development Center and eventually the DCTF will support developmental testing in an operational environment without disturbing the production processing. The Joint Interoperability Test Command (JITC) acts as a pseudo-gateway and pseudo-VAN so that transactions are routed and sent across the network during testing to more accurately emulate a production environment.

The DISA Compliance Test Facility conducts compliance testing to confirm that a contractor's EDI output file is compliant with X12 standards and DOD EDI implementation conventions. A contractor who successfully completes the testing requirements and the EDI registration process can be a trading partner with the government and exchange EDI transactions with any Civil or DOD contracting activity.

4.2.6 End-to-End Reliability and Auditability

The ECPN provides an enhanced audit trail of transactions to ensure end-to-end reliability and auditability. This audit trail includes automated error handling, alert notifications and provides transaction status.

4.2.7 Scalability

The ECPN was designed from a hardware, software and communications perspective, to meet the expanding EDI workload. The infrastructure currently handles 23,500 transactions per day with a future capacity to process 1,500,000 transactions per day. DISA is working closely with DLA and DUSD(AR/EC) to perform volume testing to ensure that the growing transaction demands can be met.

4.2.8 Use of DII Components

The EC infrastructure design included the use of existing hardware, software and communications assets to process standard transactions. As technology evolved, the infrastructure evolved also to meet increasing technological and processing demands. Hardware, software and communications components that had to be procured are compliant with the DII Common Operating Environment (COE) to ensure maximum interoperability.

4.2.9 Use of Off-The-Shelf Products

The ECPN makes extensive use of off-the-shelf products. Exhibit 4-7, Present ECPN Capabilities, depicts the hardware used by the ECPN and the Government Off the Shelf (GOTS) and Commercial Off the Shelf (COTS) software required for operation.

4.2.10 Data Standards

The DISA infrastructure supports the federal government approved implementation conventions (ICs) and has an integral role in the standards process. DISA is responsible for maintaining DOD information technology standards and conventions. Within DISA, the Center for Standards is the designated configuration manager for DOD EC/EDI standards.

Under the Information Technology (IT) Standards Program, the bulk of information technology standards management activities are accomplished by Standards Management Committees (SMCs). An EDISMC was established for the purpose of coordinating EDI standardization activities within the DOD. The EDISMC supports the development, adoption, publication, and configuration management of EDI Implementation Conventions (ICs) for DOD. It develops ICs and provides DOD technical positions as required. In addition, it guides and coordinates efforts of other groups that develop standards of importance to DOD EDI.

Present ECPN Capabilities

- ECPN

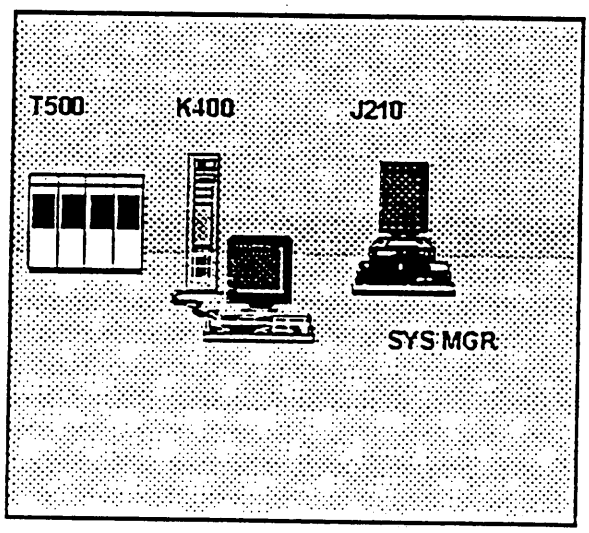

- GOTS
  - GCCS SOFTWARE APPLICA
  - GENWATCH
- COTS
  - UNIX HP10.1
  - ORACLE
  - GENTRAN: MENTOR
  - C++
  - XTERM
  - NETSCAPE
  - REMEDY
  - SYSTEM MANAGEMENT TO
  - OPERATOR TOOLS

Exhibit 4.7 - ECPN Software Requirements

Additional information about the specific transaction sets and implementation conventions supported by the DISA infrastructure can be found on the World Wide Web at the URL http://www.itsi.disa.mil/edi/edi-main.html . A description of the standards process can also be found at this location.

5.0 STRATEGY

The section describes a strategy to consistently implement EC and EDI throughout the Federal Government. It describes the actions planned by DISA and other key players to ensure that the baseline infrastructure discussed in Section 4 is prepared to support the requirements of EC and EDI users.

Topics discussed include roles and responsibilities, an approach to implementing EC and EDI, funding, standards, migration and the development environment.

5.1 Roles and Responsibilities

A firm understanding of the roles and responsibilities of all of the organizations that are cooperating to implement EC and EDI throughout the Federal government is essential for success. Exhibit 5.1 depicts the core missions and the technical components that support them, and Exhibit 5.2 depicts the overall relationships among the various players that have roles in EC and EDI.

It is important to note that these relationships are not hierarchical; they are horizontal, with each group of activities contributing its efforts and expertise to the overall EC and EDI program.

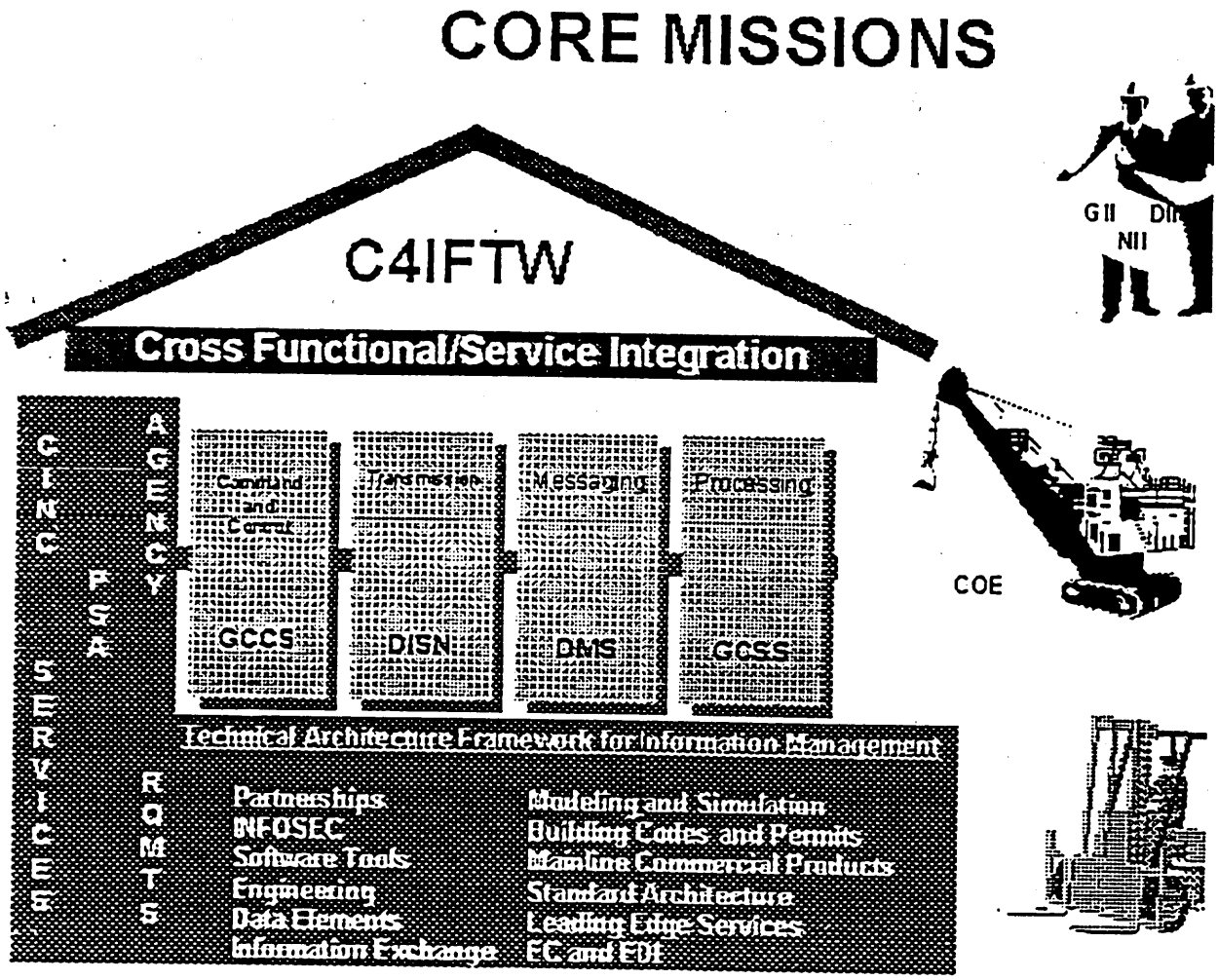

Exhibit 5.1 - Core Missions

The most important players in this program are the end users of the results of this effort - the DOD Services and Agencies and Federal Civilian Agencies who are directly involved in fulfilling their missions: warfighting and Federal domestic programs.

The Principal Staff Assistants (PSAs) (including Acquisition Reform, the PSA for Electronic Commerce), and DISA provide unified policy, coordinate requirements, apply standards, and provide equipment and support services to the end user organizations.

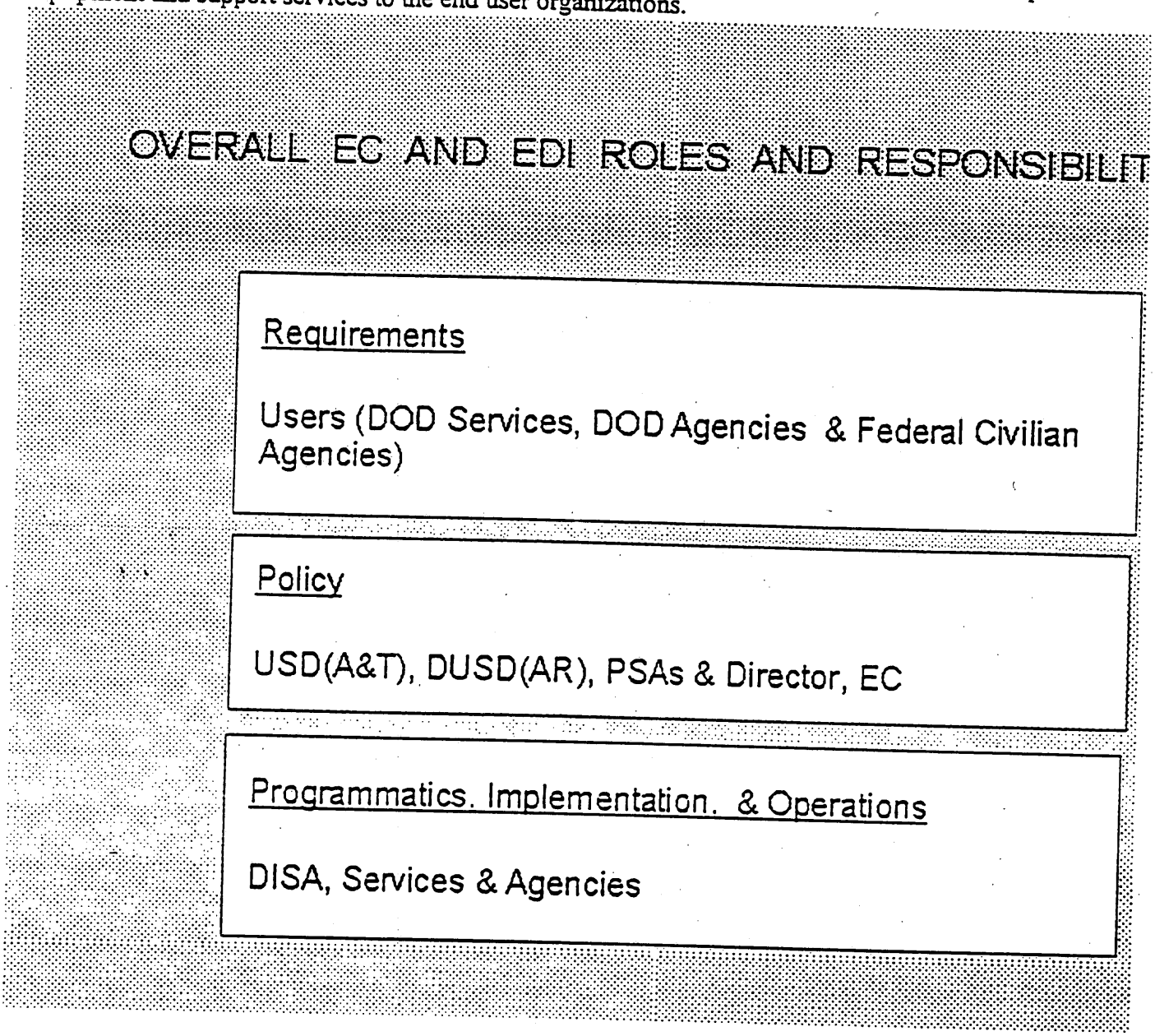

Exhibit 5.2 - Overall EC and EDI Roles and Responsibilities

5.1.1 Users (DOD Services and Agencies and Federal Civilian Agencies)

The users, DOD Services, DOD Agencies and Federal Civilian Agencies, design, acquire and develop mission applications. See Exhibit 5.3. They provide the functional expertise to define their business processes.

- Users work with PSAs, the DUSD(AR) Director of EC, and DISA D7 in developing specific EC and EDI requirements.
- The Services and Agencies develop Implementation Conventions to X12 standardsand pass them to the DISA Center for Standards for approval.
- Services and Agencies participate in the implementation of requirements into the DOD infrastructure by working with DISA D3.

USERS (SERVICES AND AGENCIE

EC AND EDI ROLES AND RESPONSIBI

Work with the following organizations in developing technical EC/EDI requirements:
- PSAs
- DUSD(AR)
- DISA - D7

Assist DISA Center for Standards in developing Implementation Conventions for X12 Standards

Work with DISA - D3 on the implementation of operatior requirements into the DOD EC/EDI infrastructure

Exhibit 5.3 - Users EC and EDI Roles and Responsibilites

5.1.2 Acquisition and Technology USD(A&T)

The Under Secretary of Defense for Acquisition and Technology is the DOD Executive Agent for EC provides oversight direction for EC and EDI. In that role, the USD(A&T) coordinates the development of functional area EC and EDI implementation plans and provides for resource management.See Exhibit 5.4.The Principal Under Secretary of Defense for Acquisition and Technology facilitates the reconciliation and resolution of cross-functional and inter-Service and Agency EC issues.

5.1.3 Acquisition Reform -DUSD(AR)

The Deputy Under Secretary of Defense for Acquisition Reform [DUSD(AR)] is the PSA responsible for insertion of EC technologies across DOD.

The DUSD (AR) has approval authority for all joint DOD and Civilian Agency initiatives and for the modernization and expansion of legacy systems to accommodate EC and EDI. DUSD(AR) also funds DOD's EC and EDI initiatives that are within the scope of the DOD EC and EDI policy and facilitates the correction of EC practices that impede BPR.

ACQUISITION AND TECHNOLOGY

EC AND EDI ROLES AND RESPONSIBILITIES

USD(A&T)
- The DOD Executive Agent for EC
- Provide EC policy direction, oversight, resources management, and coordination of requirements, and develop and maintain a DOD-wide EC implementation plan
- Review implementing documents supplementing the EC Directive
- Advocate and provide the necessary budget authority to support DOD directed initiatives

PDUSD(A&T)
- Facilitate the reconciliation and resolution of cross-functional and inter-Service and Agency EC issues for the Department of Defense

DUSD(AR)
- PSA responsible for insertion of EC in all development, modernization, or prototype of legacy and migration systems as nominated by the PSAs
- Facilitate coordination of functional requirements for EC initiatives across DOD
- Approve all Joint DOD and Federal civilian agency initiatives funded by OSD
- Facilitate the correction on any EC practices that impede BPR or process improvement

Exhibit 5.4 - Acquisition and Technology EC and EDI Roles and Responsibilities

5.1.4 Director, Electronic Commerce

Under the DUSD(AR) is the Director for Electronic Commerce (DUSD(AR/EC). See Exhibit 5.5. The Director provides a leadership role as the EC and EDI facilitator across DOD and provides a functional interface to DISA-D7 for cross-functional requirements collection and integration. The Director also acts as the DOD interface to the private sector and Civilian Agencies on EC and EDI functional issues. The Director identifies and executes business process reengineering opportunities, works with the EC user community, and develops policies and procedures necessary for EC and EDI. The Director also designs and implements outreach programs, reviews and makes funding recommendations to DUSD(AR) for new and on-going EC and EDI initiatives, and provides oversight of approved EC and EDI programs. The Director also provides limited funding for EC initiatives utilizing EC/EDI technology in DOD target systems.

DIRECTOR, ELECTRONIC COMMERCE

EC AND EDI ROLES AND RESPONSIBILITIES

- Facilitate the participation and interaction of the functional user community
- Facilitate the collection and coordination of functional requirements for EC across the Department of Defense
- Principal point of contact with the private sector, contractors, and Federal civilian agencies for the Department of Defense on EC matters
- Principal point of contact with Federal civilian agencies on government-wide EC initiatives, systems, policies, and business practices

Exhibit 5.5 - DUSD(AR) EC and EDI Roles and Responsibilities

5.1.5 Principal Staff Assistants

The PSAs to the Secretary of Defense and the Joint Staff establish policy and plan for mission applications, including data requirements for Command and Control (C2), Intelligence, and Mission Support functions.

- PSAs determine EC and EDI goals and high-level functional requirements and derive commitment from and provide resources to the organizations to implement EC and EDI goals.
- PSAs provide direction on developing and deploying EDI capabilities within their purview, and ensure the direction is observed.

Organizations responsible for standardizing business processes and information systems across DOD, such as Joint Logistics Support Center (JLSC), Defense Procurement Corporate Information Management Systems Center (DPCSC), US TRANSCOM (USTC) J4-LT, are chartered to plan, develop, coordinate, and implement improved business practices, and to oversee the development of automation to support these practices. These organizations are functionally aligned with the PSAs. These organizations:

- Sponsor DOD strategic uses of EC and EDI in their functional area.
- Provide functional input to the DOD EDISMC functional working groups.
- Assist DOD applications by providing guidelines to create user defined format files (UDF) that can be mapped to comply with federal X12 ICS.

CSD PSAs & Chairman, JCS

- Establish Policies
- Employ Strategies
- Ensure Implementation & Resolve Issues
- Coordinate with Director, DoD EC
  - Resolve Functional Issues
  - Provide for Resolution of Integration Issues
- Provide Representation to Standards Bodies
- Develop & Maintain Strategic EC Plans
- Establish Single EC Focal Point

ASD (C3I)

- Principal Technical Proponent
  - Development & Implementation Standards Based EDI
  - Support Requirements Across Funcional Areas
- Technical & Security Consultation
- Principal Point of Contact-Technical Issues
- Develop Security Policy & Procedures
- Establish & Implement Information Policy
  - Development
  - Acquistion
  - Operation

Comptroller

- Finance and Accounting
  - Direction
  - Oversight
  - Coordination

DoD Component Heads

- Establish EC Component Focal Point
  - Implementation
  - Oversight
  - Management
  - Coordination

Exhibit 5.6 - PSA EC and EDI Roles and Responsibilites

5.1.6 DISA

DISA has the responsibility to provide overall cross-functional integration and technical support to the functional users when implementing EC and EDI. Three primary organizations bear direct responsibility for providing this assistance. They are DISA-D7/ Joint Requirements Analysis and Integration, DISA - D3/Operations, and DISA-D6/JIEO/Joint Interoperability Engineering Office. DISA - D4/Logistics and Procurement and DISA - D8/JITC Modeling Simulation Assessment also provide a support role.

Exhibit 5.7 reflects DISA EC and EDI Roles and Responsibilities. Overall cross-functional requirements integration is the responsibility of DISA-D7 and its individual Integration Managers. Integration Managers are assigned across the various business areas to provide a link between the functional and technical communities. The Integration Manager provides the primary face to the DOD functional community and DISA. DISA-D7 assists the functional community in cross-functional integration and implementation activities, both for EDI and broader corporate GCSS objectives. DISA-D7 is responsible for requirements gathering, documentation, analysis and integration to assure requirements are consistent with the objectives of the overall EC and EDI program.

D7 (Joint Requirements, Analysis& Integration)

- Functional Requirements
- Cross-Functional Interfaces
  - DOD
  - Industry
  - Civilian Agencies
- Functional Security Requirements
- Requirements Analysis/Integration
  - Data
  - Infrastructure
  - Applications
  - Transactions
- OSD/Service Liaison
  - Policy
  - Strategy
  - Programmatics

D3 (Operations)

- Develop Program Strategy
- Acquire Required Program HW/SW
- Manage Program Schedule
- Control Expenditures
- Analyze Trends
- Develop VAN License Agreements
- Validate Performance
- Operate & Maintain Infrastructure
- Operational Policy Guidance
- Operational Policy Compliance
- Operate Gateways & NEPS
- Operate Customer Service Center
- Network Management
- Data Collection & Metrics Reporting
- Trouble Ticket Resolution

D6 (Engineering & Standards)

- Design, Develop, Build, Install & Test
- Compliance Test Facility
- DOD Representative to Federal, Regional, & International Bodies
- Repository for Standards
- Standards Development
- Standards Management Council
- Configuration Management

D4 (Logistics)

- Plan and establish an effective ILS program
- Establish an Infrastructure to provide life-cycle ILS

D8/JITC (Evaluation & Testing)

- Forecast Future Infrastructure
- Model Future Infrastructure
- Systems Modeling & Simulation

Exhibit 5.7 - DISA EC and EDI Roles and Responsibilities

DISA - D6/JIEO serves as the technical architect for DISA in the implementation process. Requirements defined by the functional user may require little or no change to the existing EC and EDI Infrastructure and processes, or they may require significant expansion or modification of the existing technology in order to meet the customer's requirement. DISA-JIEO is responsible for defining the most cost effective solutions and options which will allow the addition of new EC and EDI operational processes to the infrastructure. The technical architect coordinates between the various subcomponents within the DISA-JIEO structure affected, including EDI Standards Management (Center for Standards/CFS), security (Center for Information Systems Security/CISS), and engineering (Center for Systems Engineering/CFSE). DISA-JIEO interfaces with all of the DISA components and operates the Compliance Test Facility (CTF). Central Contractor Registration (CCR) is operated at DMC Columbus, and the Electronic Commerce Processing Nodes (ECPNs) at DMCs Columbus and Ogden.

5.2 Approach to Implementing EC and EDI

The preceding paragraphs discussed the roles and responsibilities of various DOD organizations primarily as stand alone entities; more detailed information can be found in various appendices.The following paragraphs describe the approach that is being used to migrate business functions to EC and EDI within the Federal government by folding them into a cohesive process. In this process projects are identified, requirements are developed, priorities are set, and costs, budgets and schedules are determined. The process embraces the concept of the Integrated Product Team (IPT) as described in Draft DOD Directives 5000.1 and 5000.2

5.2.1 Identify EC and EDI Functional Area Opportunities

The Director, EC and PSAs, in conjunction with input from Services and Military and Civilian Agencies (the users), identify opportunities for EC and EDI implementation within their functional areas. Each

opportunity may represent a need to solve a specifically identified problem, or it may represent a way to improve an existing business process. The mechanism for this activity is a high level Overarching IPT (OIPT) that meets periodically to evaluate candidate opportunities, prioritize them and provide overall unified support for implementation of the initiatives. DUSD(AR/EC), in its role as the DOD PSA for EC, will chair this team.

5.2.2 Establish Functional Working Groups

In order to ensure a continuity of focus during planning, development, and implementation of EC and EDI projects, functional Working IPTs (WIPT) will be formed. Each WIPT will consist of representatives from DUSD(AR/EC), DISA and the user's organization(s) with joint chairmen representing both the functional and technical communities. They will meet periodically to discuss requirements, work out interface issues, and resolve other issues that may arise. In cross-functional implementations, it will be necessary to involve all functional areas in the IPT activities.

5.2.3 Develop a Functional Requirements Document

The most important product of the IPT will be an electronic Functional Requirements Document (FRD) that contains sufficient information to enable DISA to accurately assess the impact of the project on the DOD EC/EDI infrastructure.It will allow DISA to identify what, if any, new technical requirements are needed to support the project's functional implementation. It will also provide information needed to develop schedules, implementation conventions, testing requirements, and installation plans.

5.2.4 Determine Priorities, Costs, Budgets, and Schedules

DUSD(AR/EC) in conjunction with the Principal Staff Assistants work together to develop the functional priorities for EC/EDI.The development and enhancement of DISA's infrastructure is based on these priorities and the documented functional requirements for the project.This is done at the corporate level so that a global view of DOD EC and EDI can be maintained, resulting in a coordinated effort that has high-level visibility and support. Estimated costs of the projects are examined and budgets and schedules are developed and priorities established.

5.3 Funding

In general the Office of the Secretary of Defense Principal Staff Assistants, Services and Agencies should fund implementation of EC so that, where it is appropriate, the Departments paper-based business processes employ EC technologies. The Components and their respective Program Executive Officers should allocate sufficient resources to ensure all migration and new starts are in full compliance with EC standards. Components should continue to implement and expand the EC program in all appropriate functional areas and ensure practices are compliant with EDI standards. Components should continue to support the use of EDI as the preferred way to enhance the Departments ability to exchange information within the DOD, with other government agencies, with allies, and with industry.

Currently, users of the DOD EC and EDI infrastructure are not required to reimburse DISA for that usage. Beginning in FY99 customers will be required to reimburse DISA for use of the EC/EDI infrastructure on a fee-for service basis (Defense Business Operations Fund (DBOF)). DISA is working to establish rates in sufficient time for services and agencies to develop plans and schedules that can be included in the POM and budgeting process.

5.4 Services and Agencies

Services and Agencies will be responsible for maintaining their functional applications, preparing them for interfacing with the DOD EC and EDI infrastructure, training operations and functional personnel, and maintaining the hardware platforms that host their applications.

5.5 Migrating to Future Infrastructures

DISA is currently engineering a more efficient infrastructure which will co-locate the NEP and GW functions into Electronic Commerce Processing Nodes (ECPNs) and standardize the services provided at each processing site. DISA is now deploying the new architecture (ECPN Version 1.0). Exhibit 5.8 depicts this new EC/EDI infrastructure architecture.

Capabilities that are built into Version 1.0 include:

- Increased user transaction capacity
- Enhanced communications
- Stable and reliable processing code
- Hardware architecture designed and optimized for EDI tasks
- Fully accessible audit trail and reporting tools
- Research tools provided to customer service center
- Multi-strategy Continuity of Operations Plan (COOP)

The outyear architecture will evolve as the Common Operating Environment (COE) and supporting common infrastructure evolve. For instance, the DMS will be used to provide standard messages to elements of the COE after DMS reaches Initial Operating Capability (IOC). Use of DMS will be integrated into EC/EDI operations. More transparently, EC/EDI rides whatever transport layer is provided by the NIPRNET. As NIPRNET evolves, EC/EDI will make use of its expanded capabilities. The planned EC/EDI infrastructure beyond FY96 (with ECPN Version 2.0 implemented) is depicted in Exhibit 5.8.

Capabilities that are built into Version 2.0 include:

- Data load leveling
- Transaction error identification tools
- EDI infrastructure viewing tools
  - Filtering by Service/Agency
  - Filtering by industrial sector
- Statistical analysis on transaction sets
- Automated report generation

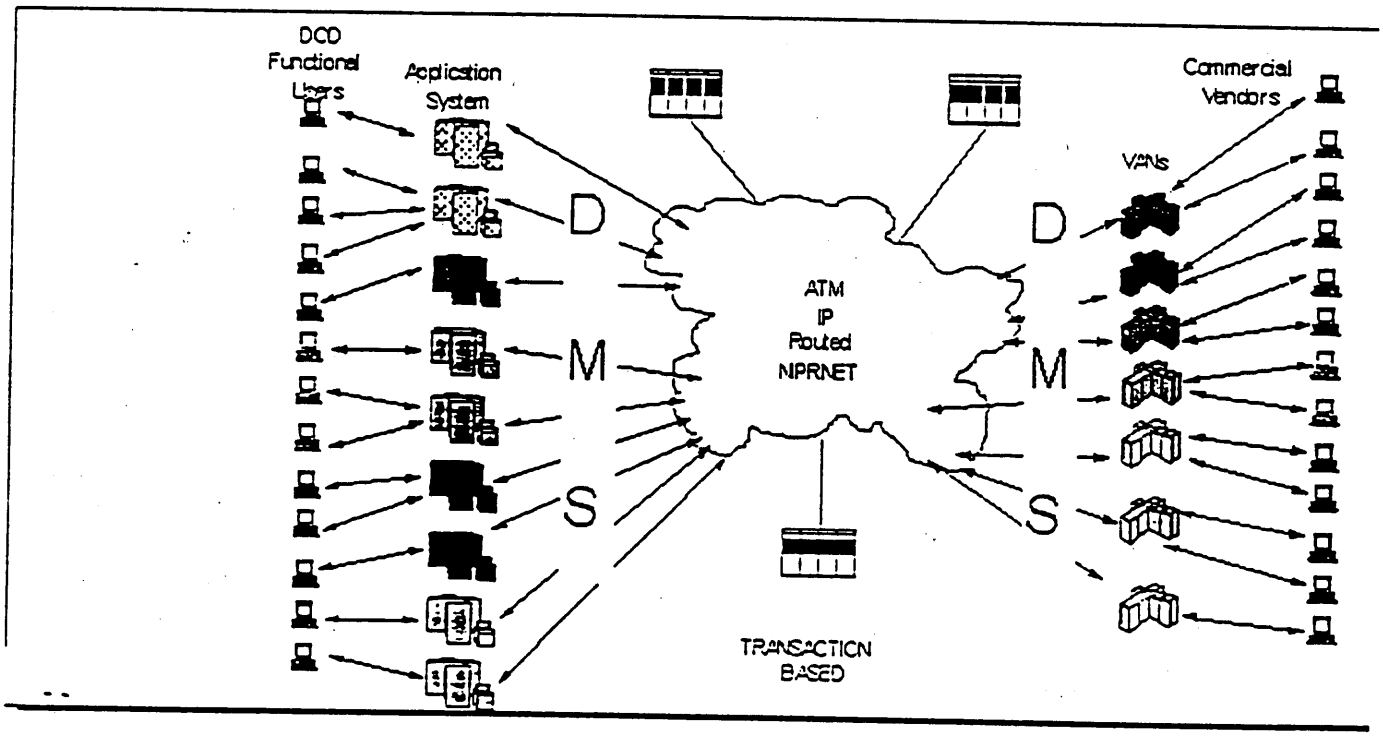

Exhibit 5.8 - Future EC/EDI Infrastructure

APPENDIX A - DOD DUSD(AR/EC)

1.0 Background

Use of Electronic Commerce (EC)/Electronic Data Interchange (EDI) to support Department of Defense (DOD) procurement processes has been under consideration for some time. A 1988 Deputy Secretary of Defense memo called for maximum use of EDI, based on 10 years of DOD EDI investigation and experiments. In 1990, Defense Management Review Decision 941 stated, "The strategic goal of DOD's current efforts is to provide the department with the capability to initiate, conduct, and maintain its external business related transactions and internal logistics, contracting, and financial activities without requiring the use of hard copy media."
In January 1993, the DOD Acquisition Law Advisory (Section 800) Panel submitted a report to Congress that concentrated on "changes that would streamline the defense procurement process in the 1990's, when dollars are expected to be fewer, work forces smaller, and superpower security threats less urgent." Among the hundreds of recommendations contained in the report were several that addressed the increased use of electronic procurement notice and contracting methods. The rapid implementation of EC in the DOD directly supports acquisition reform and the recommendations contained in the Streamlining Defense Acquisition Laws Report, particularly the recommendation to raise the small purchase threshold to a $100,000 simplified acquisition threshold. EC contains the inherent capability to provide adequate electronic notices and will enhance access to DOD procurement information for small businesses. It represents a vast improvement over the manual system that is currently in use. Therefore, EC and the associated DOD EDI architecture are vital to the reform program and Congressional support of many other acquisition reform initiatives.

On September 7, 1993, the National Performance Review (NPR) recommended that EC/EDI be expanded within the federal acquisition system. One of Vice President Gore's recommendations for procurement specifically calls for establishment of a Government-wide program to use EC for federal acquisition below a specified dollar threshold and for those acquisitions and orders that use simplified acquisition procedures. These documents provide clear evidence that there is support for the expansion of EC/EDI within DOD.

Colleen A. Preston,Deputy Under Secretary of Defense (Acquisition Reform),has taken definitive action on these proposals. On July 22, 1993, Mrs. Preston directed the Chairman of the Corporate Information Management (CIM) Procurement Council to establish a Process Action Team (PAT) to assess current contracting capabilities in the DOD EC/EDI infrastructure. Building upon current DOD capabilities, the DOD EC in Contracting PAT was tasked to develop a comprehensive plan for implementing an EC approach for procurement functions consistent with the American National Standards Institute (ANSI) X12 standards, to develop a planning estimate for the resources and schedule required, and to identify relevant policy issues.

The EC in Contracting PAT membership reflected a broad cross section of Military Services and Defense Agencies working on a full-time basis for 60 days. The diversity of the EC in Contracting PAT ensured that the needs and concerns of all DOD components were addressed during the creation of the report. The resultant plan, therefore, represents a comprehensive approach for implementing EC throughout the DOD.

1.1 Objectives of EC and EDI in DOD

The EC in Contracting PAT's Charter directed that certain actions be performed during the review. These specific taskings became the team's objectives and were assigned to working groups within the EC in Contracting PAT itself. This allowed the working groups to focus on specific objectives during review and site visits. Also, inputs were solicited from both private and public entities based on the EC in Contracting PAT's objectives. All information compiled from research, site visits, and responses to questionnaires was shared with the entire team. The objectives that guided the EC in Contracting PAT were as follows:

- Provide an assessment analysis of the current DOD EC/EDI capability in contracting in order to determine achievable near-term progress.
- Evaluate DOD EC capability to support competitive procurement and improved access and notice to small businesses in support of increasing the simplified acquisition threshold.
- Identify any relevant EC policy issues related to near-term and long-term EC implementation.
- Assess EC/EDI systems architecture (current and future) to include hubs, networks/gateways, Value Added Networks (VANs), etc., to support EC. Identify areas for standardization (e.g., EC/EDI data conventions, VAN certification, vendor registration, etc.). The purpose of this task is to identify likely future developments for which options should be maintained in the implementation of current and available capabilities and systems.
- Identify issues and assess potential areas of risk and uncertainty related to near-term EC.
- Develop a comprehensive implementation plan with specific time-phased recommendations. The plan should identify options, including estimates of resources required to achieve a rapid expansion of EC in contracting within DOD. Additionally, initiatives to publicize and educate Government and Industry on EC contracting activities would be addressed.
- Recommend implementation and deployment of a system that would provide a "single face to industry."

1.2 Functional/Technical Assessment and Analysis Results

An assessment of EC/EDI capabilities to exchange data related to the procurement process as they exist within the DOD and other federal agencies (e.g., General Services Administration (GSA), Small Business Association (SBA)) was conducted. The assessment reviewed both the functional and technical aspects of the current DOD EC/EDI capabilities in contracting including, but not limited to, Integrated Technical Item Management Procurement System (ITIMP), Standard Automated Contracting System (SACONS-EDI), SAMMS Procurement by Electronic Data Exchange (SPEDE), Government Acquisition Through Electronic Commerce (GATEC), Menu Assisted Data Entry System (MADES), and Automation of Procurement and Accounting Data Entry (APADE), in order to determine achievable near-term upgrades and deployments.

In particular, the EC in Contracting PAT assessed the current capabilities of the EC/EDI infrastructure and systems to support simplified competitive acquisition under $25,000, consistent with the ANSI X12 with improved access, notice, and participation of small businesses. Initially the EC in Contracting PAT found that most DOD components (Navy, Army, Air Force, DLA, DISA, DFAS and DeCA) pursued independent EC/EDI solutions for their automated small purchase procurement systems. A strategic goal of DOD is to present a "single face to industry." Therefore, the EC in Contracting PAT focused on methods to achieve a common standard in the distribution of EC/EDI actions to DOD's trading partners. In addition, the EC in Contracting PAT examined ways to assure that improved notice of pending procurements could be provided to insure participation by small businesses.

In support of the findings of this EC in Contracting PAT, a number of issues required a consensus approach by all members. Without these basic principles to establish the framework for future implementations, deployments, and upgrades, it would have been impossible to sustain a focused DOD solution for the expansion of EC/EDI with Industry in contracting. The following are several of the key consensus items discussed that represent the baseline functional requirements for consideration in the expansion of EC in Contracting throughout DOD:

- DOD must present a "single face to industry."

This issue was clearly the most important to the EC in Contracting PAT. A "single face to industry" is defined as performance of EC by the Government using EDI in accordance with federal information processing standards and a common set of business practices and operational principles. It must be a solution which allows the vendor to be able to process the transaction to and/or from any DOD activity, minimally subscribe to one VAN to do business with all DOD, and register only once to become a DOD supplier (rather than with each DOD component/activity).

- A single point of entry will be provided by DOD.

DOD is developing a repository for central registration of electronic addressing information, trading partner agreement information, trading partner profile, and other pertinent supplier information. This central repository will be accessible by all applications which require authorized access to this data. It will not be restricted to procurement system access only. The contractor registration process is intended to replace the Standard Form (SF) 129, Commercial And Government Entity (CAGE) code applications, and similar local forms information. A capability for use of EDI to collect and update this data will be established, and will include the ANSI X12 838 transaction set, as well as other transactions as needed. This will provide a single point of entry to obtain access to all DOD requirements.

- DOD will use ANSI X12/EDIFACT for administration, commerce, and transport.
- DOD conventions will be in accordance with ANSI X12/EDIFACT for administration, commerce, and transport.

The development of DOD conventions requires inter-service coordination and a central point of contact within DISA responsible for configuration management, with Procurement CIM sponsorship and Industry involvement. Functional data decisions will be resolved by the appropriate Office of the Secretary of Defense (OSD) sponsor. In order to facilitate the merger and avoid redundant development, every attempt will be made in future development of implementation conventions to select the appropriate standard mandated by the using community.

- Architecture will support all other DOD operational or functional requirements.

The DOD EC/EDI architecture will recognize and accommodate the operational requirements of these business functions:

1. Procurement
2. Contract Administration
3. Transportation
4. Supply Management
5. Financial Management
6. Maintenance
7. Engineering

- Use of commercial and Government products.

The EC infrastructure will be based on approved technical standards that support DOD open systems objectives that include maximum use of Commercial-Off-The-Shelf (COTS) and reusable Government-Off-The-Shelf (GOTS) software products that have been tested, accepted, and are supportable by the Government. DOD will issue a supported list of COTS and GOTS products. A central repository for reusable GOTS products will be identified.

- Use of VANs.

The DOD EC/EDI architecture will provide connectivity to public and private VANs to exchange EC/EDI transactions with trading partners external to DOD. This includes use of dedicated lines maintained by individual Trading Partners. VANs may offer bulletin-board services rather than directed delivery of EDI transactions.

To help validate DOD's perspective of what Industry has developed in the area of EC/EDI and what they require to do EC/EDI business with the Government, it was recommended that the EC in Contracting PAT solicit Industry input on their initiatives. A standard questionnaire was provided to key Industry associations representing over 9,500 companies in an attempt to reach the largest possible audience.

Based on the responses received from the VAN community, the VANs will support any DOD EC/EDI procurement initiative that is standards based and underpinned by a single set of policies and procedures

on how small purchases are to be processed. This underpinning must include, as a minimum, the use of ANSI X12 standards, standard DOD Implementation Conventions, single point vendor registration, and the use of a DOD technical framework which is standards based and Open Systems Interconnect (OSI) compliant.

2.0 Basic Requirements

The following Procurement EC and EDI projects are being funded, at least partially, and supported by DUSD(AR/EC), the DOD Electronic Commerce Office. Attachment 1 to this appendix contains a short description of each of them and also identifies which X12 transaction sets are being used.

PSA	Project ID	Project Title
Procurement/ Acquisition Reform	95DLA 005	Commercial And Government Entity Codes
Procurement/ Acquisition Reform	95NAV 011	Food Service Management
Procurement/ Acquisition Reform	95NAV 016	EDI Afloat

3.0 Analysis and Considerations

The DII provides the physical environment that supports electronic commerce within DOD. It also supports many other Federal EC activities, especially in the area of small procurement. DOD also makes use of the Federal Acquisition Network (FACNET), which was established by the Federal Acquisition Streamlining Act of 1994. The FACNET establishes parameters, built along functional lines, to be used by Government and private users as a guideline to promote consistency through the Government community.

The existing Defense Information Infrastructure (DII) satisfies many of DOD's requirements for moving electronic transactions between trading partners. There are, however, specific required features that are not supported by DII. This document encourages the functional activities to bring to light other features, as well, that are required in their conduct of electronic commerce.

Attachment 1 to Appendix A

Procurement Projects Supported by the DOD Electronic Commerce Office

---

PROJECT 95DLA 005
COMMERCIAL AND GOVERNMENT ENTITY (CAGE)

Objective:
The fully mechanized CAGE/EDI system will provide greatly improved turn around times in the assignment of CAGE codes as well as a comprehensive on-line information dissemination system for vendor demographics as well as provide a "seamless" registration mechanism for vendors doing business with the government using EC/EDI.

Project:
A CAGE code is required for suppliers participating in the Federal Supply System(FSS). Civilian Agencies, such as National Aeronautical Space Administration (NASA), General Services Administration (GSA), Veterans Administration (VA), Department of the Interior (DOI) and others participate in the FSS. NATO and Foreign Military Sales (FMS) likewise participate in the FSS. The Defense Federal Acquisition Regulations Supplement, at DFARS 204.6 require a CAGE code on any procurement in excess of $25,000.

On December 20, 1993 the Electronic Commerce Action Team (ECAT) issued a report which among other things recommended a "single face" of government for vendors registering to do business with the government. Such business should be conducted using Electronic Commerce (EC) and Electronic Data

Interchange (EDI) conventions. Based upon this recommendation the Defense Logistics Service Center (DLSC) and Defense Automated Address Service Center (DAASC) jointly developed and deployed a "door to door" mechanism for processing CAGE codes requests using 838 "Trading Partner Profile" transaction sets. This mechanism became operational in June 95 by processing the Trading Partner Profile transactions for the Central Contractor Registration (CCR) system.

The CAGE/EDI system has been funded for further automation under DOD's Office of Electronic Commerce which is under the Deputy Under Secretary of Defense for Acquisition Reform. This expanded automation project will be accomplished in four phases, each of which is should be accomplished in three months.

The fully mechanized CAGE/EDI system will provide greatly improved turn around times in the assignment of CAGE codes as well as a comprehensive on-line information dissemination system for vendor demographics. The CAGE/EDI provides a "seamless" registration mechanism for vendors doing business with the government using EC/EDI.

PSA: Acquisition Reform/Procurement

Lead DOD EC/EDI PM: DLA, POC Terrence Hunt
(616) 961-4856

Transaction Set: 838 Trading Partner Profile

Status: Deployment

Deliverables:
Match no Match Capability

Automated CAGE A Assignment

Database Expansion

Expanded Information Dissemination

PROJECT 95NAV 011
FOOD SERVICE MANAGEMENT AUTOMATION

Food Service Management (FSM) is the only certified automated information system used in the Navy to support general mess (GM) financial and inventory management functions. FSM, developed more than a decade ago, bases all functions and operating decisions on a set of policy and procedures designed to support paper-based operations. In short, FSM automates manual records keeping functions. Hardware configuration management and support for FSM has not kept pace with FSM software development; as a result many of the 477 Navy general messes are operating on obsolete hardware under approximately 45 different configurations. FSM is entirely stand-alone and does not share information.

Subsistence Prime Vendor (PV), a DOD initiative to procure provisions directly from commercial food distributors, provided the vehicle required to help move Navy food service into a less paper-based environment. Activities which procure food through PV utilize the Subsistence Prime Vendor Interface (SPVI). SPVI, an Electronic Data Interchange (EDI) translator which accepts customer orders and receipt information and forwards them to Defense Personnel Support Center (DPSC) and to the vendor, is labor intensive and requires manual data entry. Procurement, receiving and bill payment processes are inefficient and cumbersome using current SPVI methodology. DPSC is the information broker controlling flow of information to vendors, ordering activities and bill paying activities.

Naval Supply Systems Command (NAVSUP) has developed a notional concept of operations for food service operations which exploits advantages of new technologies and PV initiatives. Enabling

technologies such as bar-coding and EDI will allow Navy food service procedures to be significantly streamlined. In addition, data flow directly to the parties requiring it to perform their functions. Non-value added information brokers are eliminated. American National Standards Institute (ANSI) X12 EDI transaction sets will be used in all phases of the procurement and bill payment. Information will be shared between the ordering activity, vendor, bill paying activities, Defense Finance Accounting System (DFAS) and DPSC. In an afloat environment, FSM will forward procurement data to the EDI translator via the shipboard network. Ashore, FSM will forward data via phone modem directly to a shore-based translator.

Under the NAVSUP concept of operation, FSM users will be able to place orders, certify receipt of provisions and authorize payment of dealers hills using EDI transactions. Information provided from the vendor such as catalogs and shipping notices will be forwarded using EDI and directly uploaded into FSM. These shipping notices will also provide Uniform Product Code (UPC) information which will further enhance benefits derived through bar-coding. Bar-code information will be available to an ordering activity before any provisions are ever received. Time and labor requirements to perform provisions receipt and stowage will be significantly reduced while inventory validity increases. Vendor bills will be certified using EDI transactions and paid via electronic funds transfer. Eventually all hardcopy documentation will be replaced with EDI transactions. Fully implementing EDI as defined in the NAVSUP concept of operation will allow several non-value added functions and costs to be significantly reduced or entirely eliminated. EDI will facilitate the efficient sharing of information, eliminate paper transactions, minimize manual data handling and associated errors and reduce non-value added processes.

PSA: Acquisition Reform/Procurement

Lead DOD EC/EDI PM: LCDR Morris Caplan
(703) 602-36B6

Transaction Sets:
821 Financial Reporting 860 Purchase Order Change
824 Application Advice 861 Receiving Accept
832 Price Catalog 864 Text Message
850 Purchase Order 865 Purchase Change
857 Shipment Notice 997 Functional Acknowledgment

Status: Prototype

Hardware for shipboard upgrades of 190 ships. Analysis & Systems Integration

---

PROJECT 95NAV 016
EDI AFLOAT

The shipboard community uses multiple legacy supply and financial systems to meet the reporting requirements for accounting and inventory data required by the Defense Finance and Account Service (DFAS) and the Government Accounting Office (GAO). Current afloat legacy systems are being replaced by a Relational Database Management System (RDSMS) and 4th Generation software (called R-Supply). Additionally, current legacy financial programs will be replaced by DFAS interim migratory systems. The afloat systems do not provide data real-time or in the detail required by the interim migratory accounting systems. Discrepancies due to manual data entry and the time-lag caused by numerous paper/tape transactions going back and forth between the ships and shore activities get compounded while at sea. A 45 day accounting cycle exist because of the time involved in receiving obligation and billing Information from afloat and ashore activities. To provide real-time input detail obligation and expenditure data. and allow for independent development of software; Electronic Data Interchange (EDI) is seen as a proven mechanism to which will allow these goals to be met.

The Navy will use EDI for data exchange in developing its afloat software and migratory accounting

systems. We will also use this medium to facilitate the movement of financial data ashore by reducing complexity and by providing timely data, thereby reducing the accounting cycle. Additionally, EDI will provide for increased asset visibility, compressed telecommunication transmissions, and allow the Navy to consolidate and standardize its business practices afloat and ashore.

EDI coupled with R-Supply will also provide the Fleet with the ability to take advantage of numerous Defense Logistic Agency (DLA) initiatives involving the use of EDI within the private sector. These initiatives involve customer direct ordering of various commodities from vendors. Currently, pharmaceutical, medical/surgical supplies and food items are ordered electronically using interfaces. In the future, the use of electronic catalogues provided via EDI, and resident in the afloat software would be used. Thus, allowing the customer to select the required Items and transmit an order via EDI for delivery to the afloat activity.

PSA: Procurement

Lead DOD EC/EDI PM: Navy, POC CDR Doug Ballou
(703) 607-0835

Transaction Sets:

511 Requisition 855 Purchase Order Acknowledgment
810 Invoice 856 Ship Notice
821 Financial Reporting 857 Shipment and Billing Notice
846 Inventory Inquiry 858 Shipment Information
850 Purchase Order 888 Item Maintenance
854 Shipment Delivery Discrepancy 940 Warehouse Shipment Notice
Information 997 Functional Acknowledgment

Status: Prototype

Develop Prototype, Analysis and Evaluation of Proof of Concept and Expanded Prototype

---

Table of Contents

DISA D7 Home Page

DISA Home Page

APPENDIX B - DOD FINANCE AND ACCOUNTING
(POC OUSD(C))

1.0 Background

The Deputy Secretary of Defense directed the establishment of a working group to develop a course of action to alleviate the systemic problem of Unmatched Disbursements (UMDs). Under the guidance of the Acquisition and Financial Management Panel, co-chaired by the DOD Comptroller and the Principal Deputy Under Secretary of Defense (Acquisition and Technology), the Acquisition and Financial Management Working Group was chartered for that purpose. An unmatched disbursement is any disbursement received by an accounting office that cannot be accurately matched to the correct obligation record. As of June 30, 1993, DFAS reported $19 billion in unmatched disbursements. Contract payments made up the majority of the dollar value of unmatched disbursements.

The report, *Eliminating Unmatched Disbursements - A Combined Approach*, prepared by the Acquisition and Financial Management Working group, presents 48 recommendations focusing primarily on short and mid-term improvements. Within the recommendations a central theme to make extensive use of EDI is presented to eliminate duplicate data entry and to enable the timely distribution of contractual and financial data.

Since the initial Working Group report, there have been further analyses to refine the recommendations. DFAS and DOD now have underway a program to implement the final recommendations of the Working Group and has already completed many of these actions. The technical implementation of EDI related actions is to be supported by the EDI portion of the Defense Information Infrastructure (DII) which is maintained by DISA.

The Defense Finance and Accounting Service (DFAS) is responsible for providing financial, accounting, disbursing, and reporting services to the various Department of Defense agencies and other governmental entities. DFAS operates financial applications at 21 operating locations that report to five DFAS centers which report to DFAS Headquarters in Washington, DC.

In addition to standard accounting functions, each center performs specialty functions that vary from location to location.

The following is a list of those specialty functions:

- DBOF Accounting and Payments
- Support Services
- Security Assistance
- Customer Service and Performance Management
- General Counsel (and Garnishment Operations)
- Financial Operation Review and Performance Assessment
- Contract and Vendor Entitlement
- Military and Civilian Pay
- Travel Pay
- NAF Accounting
- General Accounting
- Transportation

Each operating location is supported by a Defense Megacenter (DMC) as shown in Exhibit A.1.

As a core business function, Finance and Accounting has required extensive sharing of data and verification of accuracy of data. Various forms of data sharing have been developed including paper, 9-track tape, proprietary data formats over Defense and private networks (Defense Data Network, Automatic Digital Network, etc.), File Transfer Protocol, and Electronic Commerce/Electronic Data Interchange.

DFAS ARCHITECTURE

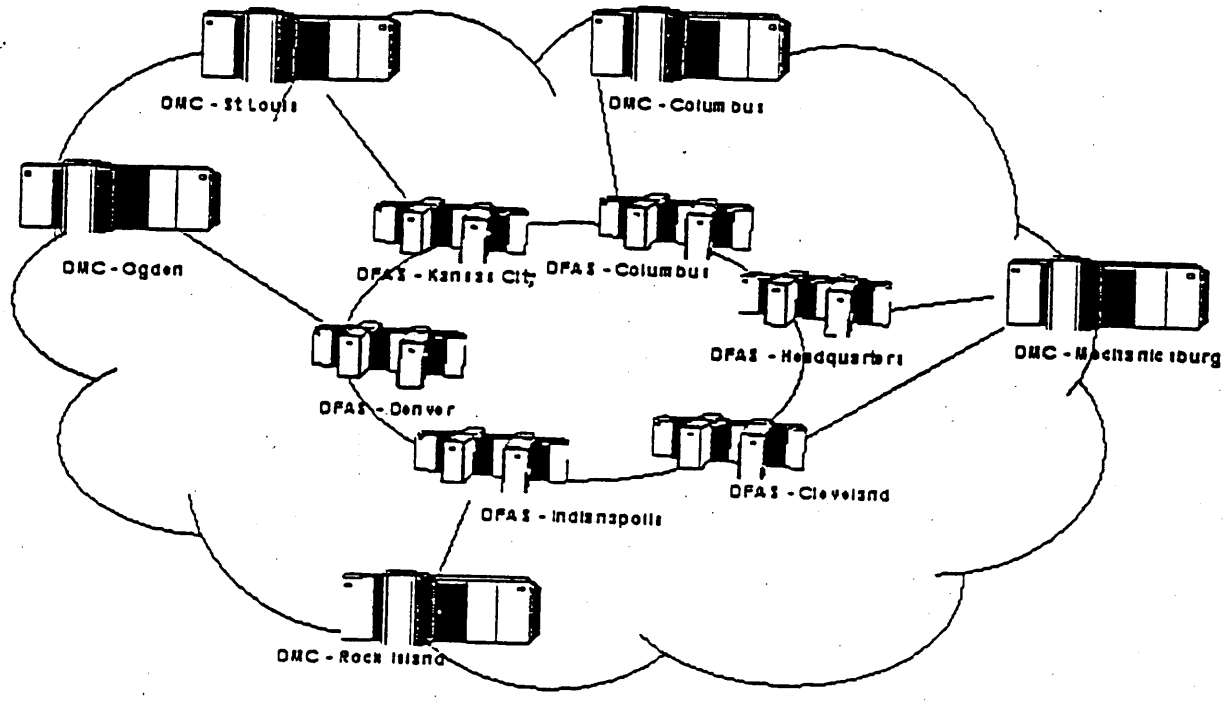

Exhibit B.1 - DFAS Architecture

In addition to exchanging information with other DFAS systems and DOD agencies, DFAS also exchanges or shares business information with external trading partners such as the Federal Reserve, Department of Treasury and the General Services Administration. The term *share*is used in cross-functional integration discussions to mean that the referenced parties all have access to the source data, which eliminates the need to rekey the data, and as a consequence eliminates the potential for human errors made while racing data. The term *exchange*means the transfer of data from one party to another. As an example, purchase order data are exchanged between the purchaser (DOD agency) and the vendor (GSA), while the same data are shared among the GSA's shipping department, the GSA's accounts receivable department, and the DFAS's accounts payable department.

2.0 Basic Requirements

DFAS has established a four phase approach to eliminating unmatched disbursements. Approximately 60 percent of unmatched disbursements are attributed to major weapons systems procurement. DFAS has been working with the Defense Procurement Corporate Information Management Systems Center (DPCSC), which has responsibility for DOD's procurement systems; with the Services and Agencies who develop and operate the procurement systems, and with DISA, who is responsible for providing and maintaining the EC and EDI infrastructure.

The first phase in eliminating unmatched disbursement is to enable the Services and Agencies Procuring Contract Officers (PCOs) to generate X12 850s describing the contract and its associated terms and conditions, as well as any X12 860s for modifications to that contract, to the Administrative Contract Officers (ACOs), who are responsible for contract administration on major weapons systems. This phase is currently under test. The major requirements that have been identified are:

Translation Service (X12 3050 850 and 860) for the Army, Navy, Air Force and DLA

- Compliance Testing of all Service and Agency generated transactions
- Audit of transaction through the infrastructure
- Two hour delivery service for all 850 and 860 traffic

The next phase in solving unmatched disbursements is to implement EDI for pre-payment audit of vendor invoices. Vendors normally submit their invoices directly to the DFAS center responsible for payment. However, DFAS's accounting system may not be updated to reflect any contract modifications. In the past, if the accounting system determined there was a discrepancy, a DFAS payment officer would attempt to reconcile the differences over the telephone with the ACO and/or the PCO. During this phase, the contract writing systems will provide all contract information to the accounting system using an X12 850 or 860 transaction set. This will enable DFAS' accounting system and the ACO and PCO databases to remain synchronized. The requirements for this phase are:

- Translation Services (X12 3050 810) from the ACO / PCO to the DFAS Centers
- One-to-many transaction routing
- Network Entry Point Services for vendors to submit invoices (X12 3050 810)

The third phase is to implement EDI for contract closeout. During this phase, DFAS will pay the vendor and send a X12 820 Remittance Advice to the Department of the Treasury to ensure the correct account is debited. This same payment information will be supplied to the ACO and PCO. This testing is scheduled to commence in April 1996. The requirements for this phase are:

- Translation Services (X12 3050 810 and 820)
- Electronic Funds Transfer (EFT) Services
- One-to-many transaction routing

The final phase is to implement this EDI capability to all DOD procurement, contracting, and accounting systems. It will also include exchange of EDI transactions with the Department of Treasury, and any other federal agency with whom DOD conducts business. Requirements are still being identified for this phase.

The following Finance EC and EDI project is being funded, at least partially, and supported by DUSD(AR/EC), the DOD Electronic Commerce Office. Attachment 1 to this appendix contains a short description of it and also identifies which X12 transaction sets are being used.

PSA	Project ID	Project Title
Finance	95DLA 014	Electronic Funds Transfer

3.1 Analysis and Considerations

The main issue impacting implementation is the ability of DOD applications to accommodate DFAS requirements. Some applications, such as the Army's SAACONS, have indicated that much work needs to be done to change their legacy systems to provide application User Defined Format (UDF) files for 860s and to comply with X12 version 3050 of any transaction set.

DFAS has a requirement to address and deliver single transactions to multiple locations. Current X12 standards allow only a single addressee per transaction. This restriction results in the Service or Agency transmitting a UDF for each addressee, which consumes scarce resources and increases the costs of doing EDI for the functional area. DISA is working to resolve this issue and has determined there are several options available. Some options are sponsoring a request for change to the X12 standard to allow multiple addressees or to build this capability into the Electronic Commerce Processing Node.

Multiple organizations are setting EDI policy. This conflicting guidance causes confusion for Services/Agencies while they are developing requirements and application specifications for EDI projects.To eliminate this conflict in policies, the procurement and financial policy offices are coordinating data requirements among themselves. The Acquisition and Financial Management Working

Group (AFMWG) has been established to accomplish numerous actions to resolve unmatched disbursements. Many of these actions involve EDI implementations.

Attachment 1 to Appendix B

Finance Projects Supported by the DOD Electronic Commerce Office

---

PROJECT 95DLA 014
SUBSISTENCE ELECTRONIC FUNDS TRANSFER

Objective:
This initiative will provide the Electronic Data Interchange (EDI) transaction for the Federal Reserve and will provide the cash disbursement back to the vendors bank as well as a remittance advice back to the vendor. Finally, it will provide an overall audit trail of the financial transactions.

Project:
Defense Federal Accounting Service (DFAS) currently pays subsistence invoices using a mailed paper check. The annual price to accomplish this process is over $6 Million ($65 per invoice for 100,000 invoices). The current process starts with the determination by the voucher examiner that the invoice should be paid and is not completed until the check reaches the vendor via the mails.

This project will work for the payment of all subsistence vendors. It is an enterprise project and deals with a Cash Concentration and Disbursement (CCD) Transaction with an 80 character addendum record. The CCD is a Treasury transaction that works through the automated clearing house of the Federal Reserve Banks. First, it will provide the Electronic Data Interchange (EDI) transaction for the Federal Reserve. Second, it will provide the cash disbursement back to the vendors bank as well as a remittance advice transaction back to the vendor. Finally, it will provide an overall audit trail of the financial transactions

Because the timely processing of this data is critical (7 day payment of billing) and the importance of financial integrity it was determined that it was in the best interest of the Defense Logistics Agencys Subsistence Program to keep the processing within Defense Integrated Subsistence Management System (DISMS). The funding for this project ($184,000) will cover the programming which will be accomplished by the Defense Systems Design Center. This programming requires the modifications of 10 different DISMS modules. Seven of these modules are in the contracting area while the remaining three modules are related to financial processing and payment.

This project in conjunction with the Electronic Invoice Project will reduce the amount of manual voucher examination required and will actually facilitate payment to subsistence vendors electronically. The enhancement to an electronic payment process is seen as the incentive to the small business vendors to convert to an electronic invoicing system. Our initial analysis has shown that processing an invoice for payment electronically should reduce workload for DFAS and eventually costs to our subsistence program. The estimates of what an electronic invoice costs to process are $10 (down from $65 in the manual process). Using these estimates, when Electronic Funds Transfer and the Electronic Invoicing Projects have been fully implemented our cost savings on a yearly basis are estimated to exceed $5 Million.

PSA Finance

Lead DoD EC/EDI PM: DLA, POC Jeffrey Nienstedt
(215) 737-3860

Transaction Sets

820 Payment Order/Remittance Advice 823 Lockbox
850 Purchase Order

Status Prototyping

Deliverables: Software

Table of Contents

DISA D7 Home Page

DISA Home Page

APPENDIX C - DOD TRANSPORTATION

(POC USTRANSCOM TCJ4-LT)

1.0 Background

Since 1986, when the Assistant Deputy Under Secretary of Defense - Transportation Policy, ADUSD(TP), conceived the Defense Transportation EDI (DTEDI) program, the Defense transportation community has struggled to sustain initial development efforts. Often using minimal resources, it has had some success in implementing EDI capability in three areas -- transportation rates, government bills of lading (GBLs), and carrier invoices. As a means of more efficiently advancing those efforts, the Defense transportation community established the DTEDI committee to guide it through the initial areas of EDI development into a long-term EDI fielding and maintenance effort.

In 1992, the Military Traffic Management Command (MTMC) fielded its CONUS Freight Management (CFM) system. The CFM system receives electronically formatted standard tenders containing freight rates from commercial carriers. Defense shipping activities access CFMs rate file to assist in mode selection and determining the cost of a shipment prior to a move. MTMC has now qualified more than 100 commercial carriers for submitting standard tenders electronically to the CFM.

Complementing MTMCs CFM are the Services and DLAs electronic GBL project and the DFAS-IN Defense Transportation Payment System (DTRS) which is developed to receive and process costed GBLs and carrier invoices electronically. DFAS-IN has made its EDI capability known to the carrier industry and sought to expand its use between DTRS and carrier systems. DFAS-IN implemented its electronic invoice capability in 1994 and currently has the capability to receive electronic invoices from more than 30 commercial carriers.

In a May 1994 memorandum to the Secretaries of the Military Departments and Directors of Defense agencies, the Deputy Secretary of Defense - Logistics, directed all DOD Components to make maximum use of EDI in all business related transactions. As a result the Defense transportation community is exchanging bills of lading, invoices, rate tenders, and shipment status messages electronically among its members and commercial industry. Completing the implementation of EDI into those processes and accelerating its expansion to new areas has now become a primary objective of the Defense transportation community.

In an 18 January 1995 memorandum, the Deputy Under Secretary of Defense - Logistics, designated the United States Transportation Command (USTRANSCOM) as lead agent for the DTEDI program. As a result, USTRANSCOM developed a plan that presented a strategy for managing the program. That strategy calls for USTRANSCOM to develop a comprehensive implementation plan that fosters further development and expansion of the DTEDI program. Since that time, USTRANSCOM has undertaken a series of actions that will enable the Defense transportation community to improve its program management capabilities, continue expanding its EDI efforts, and accelerate the development of new initiatives. The *Defense Transportation Electronic Data Interchange Program Implementation Plan*, May 1996, prescribes an aggressive program to accelerate the pace of EDI implementation in support of transportation. This plan is aimed at focusing energy, attention and resources toward expanding EDI uses in support of DOD transportation business information exchanges. It identifies basic requirements for the use of EDI in support of DOD transportation in addition to detailing the current EDI initiatives. It further describes in some detail those actions regarding the freight transportation program and proposed plans and schedules for implementing them. The current plan only addresses implementing EDI in the Defense freight transportation system and the eleven processes that support it. During FY96 USTRANSCOM will describe DODs EDI programs for passenger and personal property transportation.

Along with its successes, the Defense transportation community has gained valuable experience during the development and fielding of these EDI initiatives. The DTEDI committee has been particularly instrumental in resolving problems. Some of the DOD Transportation EDI initiatives have matured past

the development phase and are entering the life-cycle phase. The DTEDI committee, with its established administrative and technical procedures, provides a strong basis for addressing the issues associated with the life-cycle maintenance process.

2.0 Basic Requirements

With the experience it has gained by developing EDI processes and managing their coordination through the DTEDI committee, the Defense transportation community has laid the groundwork for expanding EDI applications to all facets of transportation and adapting rapidly changing business and technological environments.

The DOD is seeking to enhance several transportation and logistics processes using EDI. Specifically, the Defense transportation community is exchanging bills of lading, invoices, rate tenders, and shipment status messages electronically among its members and commercial industry. Introducing EDI technology into those processes directly benefits several DOD logistics programs such as the Total Asset Visibility (TAV) and InTransit Visibility (ITV) integration programs. Completing the implementation of EDI into those processes and accelerating its expansion to new areas has now become a primary objective of the Defense transportation community.

The Defense transportation community has implemented the EDI GBL Billing and Payment and Carrier Rate Submission Projects using Sprints EDI VAN services procured under a GSA contract. Those services are now being provided by Sprint under provisions of a Federal Telecommunication Service 2000 contract. USTRANSCOM is evaluating four communications alternatives to provide its long-term and interim EDI telecommunications requirements. The DTEDI program requires an EDI VAN for DOD activities to exchange data electronically with their commercial trading partners and with their DOD trading partners that do not have access to a military data network (such as DISN). Transportation activities should continue to use DISN when it is available for exchanging EDI data within DOD, but they also require access to a commercial EDI VAN. That VAN must have the capacity to satisfy Defense transportation s value-added telecommunications service requirements and its estimated volume of data. (A list of value-added telecommunications services is described in Chapter 6 of *Defense Transportation Electronic Data Interchange Program Implementation Plan*). The four telecommunications alternatives under consideration by the DTEDI are:

1. Use the Federal Acquisition Computer Network (FACNET).
2. Use the EDI VAN services available under the Federal Telecommunication Services (FTS) 2000 contract.
3. Allow each transportation activity or Military Service and Defense agency to contract separately for EDI VAN services.
4. Use the EDI VAN service capabilities of the GTN contractor.

The alternative that best satisfies the Defense transportation communitys requirements has not been selected. The DTEDI needs to select the least-risk EDI telecommunications alternative. Defense transportation s bill of lading electronic payment program currently operates in a production environment so it cannot implement an EDI telecommunications strategy that is unproven. The DTEDI program needs to embrace both an interim and long-term strategy that offers the lowest risk to its current EDI initiatives.

3.0 Analysis and Considerations

Analysis: The Defense Transportation Community with USTRANSCOM at the lead has determined that EDI will be used as a vehicle for transportation modernization.

Considerations: EDI Implementation Conventions must be developed and maintained to meet the business requirements of all trading parties to the exchange. Business processes, rules, and practices must be understood with Automated Information Systems synchronized to version and release in a thoroughly integrated structure to gain real advantage from the EDI technology. Ad Hoc development efforts usually prove of little value and lead to more frustration and cost to update than do corporate

actions. Configuration management of software and implementation conventions is of utmost importance to rapid and effective utilization of EDI when meeting daily business needs.

Attachment 1 to Appendix C

Transportation Projects Supported by the DOD Electronic Commerce Office

The following Transportation EC and EDI project is being funded, at least partially, and supported by DUSD(AR/EC), the DOD Electronic Commerce Office. Attachment 1 to this appendix contains a short description of it and also identifies which X12 transaction sets are being used.

PSA	Project ID	Project Title
Transportation	95DLA 017	ASN Consist Initiative

This project description was not on the diskette.

Table of Contents

DISA D7 Home Page

DISA Home Page

APPENDIX D - DOD MEDICAL LOGISTICS

1.0 Background

Medical logistics is a function within the Military Health Services System (MHSS), a worldwide organization composed of the health resources of DOD, Army, Navy, and Air Force. The information required for MHSS covers a diverse range of peacetime and war-related areas including coordinated and managed care, preventive medicine, research, and logistics. Medical logistics supports the MHSS health care delivery mission by furnishing matériel, equipment facilities, services and information resources essential to patient care in both peacetime and wartime. The current automated systems providing Medical Logistics capabilities are:

- Central Processing and Distribution (CPD) operates at one Army, 19 Navy and four Air Force Medical Treatment Facilities (MTFs) and supports intra-facility distribution of medical supplies, linen and office supplies.

- Air Force: Medical Logistics (MEDLOG) operates at 89 Air Force peacetime and contingency hospitals. MEDLOG provides comprehensive and integrated Medical Retail Supply support, extensive quality assurance, assemblage management capabilities, medical equipment management and Biomedical Maintenance capability. MEDLOG also support the administration of Blanket Purchase Agreements contracts. Mobile MEDLOG operates with Air Transportable Hospitals (29) to support wartime/contingency medical supply. Mobile MEDLOG provides the same capability as MEDLOG but operates on a laptop personal computer.

- Army: Theater Army Medical Management Information System-Medical Logistics (TAMMIS_MEDLOG) operates at 48 peacetime hospitals and 140 field units to order, manage, and distribute equipment and medical supplies for contingency and peacetime requirements. TAMMIS provides the Army with a single medical supply system supporting peacetime and wartime/contingency at all active Army, Reserve, and National Guard medical supply operations.

- Army Medical Department Property Accounting System (AMEDDPAS) operates at 48 peacetime hospitals and provides comprehensive equipment management including planning, funds tracking, property accounting, equipment maintenance, central asset visibility and excess redistribution.

- Navy: Medical Inventory Control System (MICS) operates at 17 Navy hospitals to provide an inventory management and financial accounting system for medical treatment facilities supported by the Navy Stock Fund.

- Micro Medical Inventory Control System (Micro-MICS) operates at 35 Navy medical and dental treatment facilities. Micro-MICS is the logistics system for hospital ships and fleet hospitals to provide joint service interoperability support during wartime and in contingency operations.

- Biomedical and Facilities System (BIOFACS), a commercial off-the-shelf system, operates at 55 Navy medical and dental treatment facilities to provide support for property accounting and equipment management.

- Property Management and Budgeting System (PMBS) operates at over 80 Navy medical and dental treatment facilities to provide automate support for property management and accounting.

- Automate Procurement System (APS) operates at four Navy Hospitals to support small purchase requirements.

The Defense Medical Logistics Standard Support (DMLSS) Program is responsible for defining and implementing an efficient medical logistics support environment for health care operations in peacetime, military operations other than war, and wartime. The program is composed of two major components:

(1) development of Automated Information Systems (AIS) to streamline, enhance, and automate medical logistics functions and (2) application of the Medical Logistical Process Improvement Program (MLFPIP), which identifies and implements improvement opportunities associated with the business practices and processes of medical logistics.

The program objectives identified for the MLFPIP and DMLSS AIS are:

- Provide on-line, standard data based systems to automate all health care logistics functions in DOD Medical Treatment Facilities (MTFs) worldwide.
- Facilitate sharing of common data within the MLFPIP and DMLSS environments by standardizing functions and using standard data elements within the MTF and throughout the DOD health care logistics system.
- Economize by reducing emergency supply requests and hospital inventory, ensuring accurate stock levels, and automating repetitive tasks.
- Improve accuracy and response time for Medical Logistics.
- Incorporate electronic commerce technology.
- Move toward a paperless transaction work environment.
- Develop more efficient contract/payment procedures.

The *DMLSS Program Telecommunications Plan*dated April 1, 1994, the *Medical Logistics Functional Process Improvement Program and Defense Medical Logistics Standard support Automated Information System System Decision Paper Milestone I, Approval Decision Package*, dated March 1995, and the *Baseline Functional Economic Analysis Milestone I*,contain more detailed information for DOD Medical Logistics.

2.0 Basic Requirements

In the draft *Medical Logistics Functional Process Improvement Program and Defense Medical Logistics Standard Support Automated Information System, Operational Requirements Document*, dated 17 March 1995 (version 4.3), the following requirements were identified:

- Medical Logistics may have the requirement to issue purchase orders against vendor electronic catalogs. These catalogs and purchase orders are exchanged using the DOD EC and EDI Infrastructure.
- Medical Logistics intends to use industry-specific X12 standards and conventions that are in compliance with the DISA Center for Standards X12 IC development process.
- It appears that Medical Logistics wants to implement the prime vendor concept, which utilizes direct connections to vendors outside of the DOD EC and EDI Infrastructure.
- All contract Prime Vendors are required to comply with ANSI X12 standards. Medical Logistics contractually requires Prime Vendors to acknowledge receipt of order transactions within 2 hours. Delivery of the item is required within 24 hours.
- Medical Logistics requires EDI support during times of troop deployment and mobilization that may require modification to the DOD EC and EDI Infrastructure.

The DMLSS AIS shall operate in two different environments. The first is in fixed, stationary, and environmentally controlled sites. The Medical Treatment Facility (MTF) is considered a fixed site which may be a medical center, hospital, clinic (no in-patient beds), dispensary (no in-patient beds), satellite

unit, or independent unit (e.g., Naval Dental Centers [NDCs]). DLA DPSC is a DOD wholesale management function at a fixed location (Philadelphia, PA).
The second environment is field medical operations. Traditionally, this environment is considered field operations in which mobile medical units have been deployed to a location away from the fixed MTF and must provide the same level of logistics support. Field operations shall require DMLSS AIS equipment to operate effectively in a variety of environmental conditions.

3.0 Analysis and Considerations

The Preliminary Functional Economic Analysis for medical logistics identified deficiencies in decision support, communication, and information processing at all levels of the Military Health Services System in 1992. The existing information systems relied upon a combination of manual and automated procedures for the compilation and transmittal of information. Information processing procedures differ between the three services and among information systems within each service. Each service operates and maintains its own hospital logistics system(s).

The Medical Logistics Functional Process Improvement Program (MLFPIP) identified alternatives and a strategy to identify and implement improvements that significantly reduce costs and improve medical logistics support. The Medical Logistics FEA examined three alternatives and chose the option with the highest return on investment. The alternative chosen included the following options:

- DPSC award centralized prime vendor contracts with commercial medical distributors
- DPSC award centralized contracts with all manufactures of medical supplies for their entire product lines. These items would be distributed by prime vendor distributors direct to the hospital level.
- EDI will be used to order items, process invoices and provide electronic funds transfer
- Items stocked at DLA depots will be reduced to levels necessary for wartime/contingency responses
- MLFPIP and DMLSS will be deployed to the largest MTFs first to achieve earliest payback
- DPSC will be able to perform leverage buying of medical supplies to achieve the best prices based on consumption history

3.1 DMLSS

An integrated Defense Medical Logistics Standard Support (DMLSS) Automated Information System (AIS) was identified as a method to standardize business practices for all MHSS logistics organizations. DMLSS AIS, after implementation, will replace forms; perform on-line product research; report real-time status of orders and fund balances; and serve as a crucial communication link between medical logistics personnel and customers, vendors, finance, contracting, procurement, maintenance support activities and other agencies. The DMLSS AIS development will be integrated with Business Process Reengineering initiatives that include bar code technology, contracting warrants, dedicated trucks, Forward Customer support (FCS), inventory management to point of consumption, mechanized material handling systems, Medical Express, Prime Vendor, and TotalPackage Fielding (TPF).

DMLSS is planned for deployment to nearly 350 large, medium and small medical treatment facilities (MTFs), Army MEDLOG battalions, field units, Navy hospital ships, Air Force air transportable hospital, and Navy dental clinics.

The DMLSS AIS is anticipated to:

- Reduce pipeline time from when the need is identified to need satisfied
- Reduce on- hand inventories
- Reduce utility and maintenance costs
- Reduce number of items destroyed because the credit or replacement return date has expired
- Improve reutilization of excess serviceable items in the MTF
- Reduce AIS and non-AIS consumables through use of electronic forms, reports, and documents
- Reduce or eliminate late vendor payments through automation

DMLSS will be based on four subsystems that will support its users:

1. Facility management
2. Equipment and technology management
3. Matériel management
4. Customer support

Medical logistics is linking the shutdown of legacy systems to both availability of the DMLSS AIS software and achievement of MAISRC milestones. The final increment of DMLSS AIS is scheduled to be available by 1998.

3.2 EDI and Just-in-Time (JIT)

EDI is planned to provide savings in administration and provide JIT implementation of inventory management. JIT inventory management can provide savings from reduced inventories and associated costs, increased flexibility to allow relatively quick changes in medical emphasis and fostering competitive commercial practices to use depot operations when advantageous. The DMLSS EDI is also planned to allow MTFs to interact with the commercial medical market and facilitate the use of local and decentralized Blanket Purchase Agreements.

One item of concern to Medical Logistics is that it requires 24-hour receipt acknowledgment of transactions sent.They require vendors to receive Medical Logistic transactions within 24-hours.

Table of Contents

DISA D7 Home Page

DISA Home Page

APPENDIX E - DOD PROCUREMENT

1.0 Background

The military departments, defense agencies, and their components have developed processes and business practices, including approximately 76 unique Automated Information Systems (AISs), to perform their procurement missions. One AIS, MOCAS, also supports the financial community's payments function.

Although the processes and business practices at non-automated procurement activities operate within the same general framework, they are not standardized. As a result, information transfer among contracting activities is often a manual process requiring multiple re-keying of data that increases the probability of errors and accurate DoD corporate procurement information is not readily accessible. Generally, such manual processes are labor intensive, costly, and less efficient than automated processes.

2.0 Basic Requirements

The Director, Defense Procurement, recognizing the inefficiencies and costs associated with sustaining existing automated and non-automated procurement systems, established the Standard Procurement System (SPS) Program. The SPS is an iterative program with capabilities and deployment time phased to correspond with user needs and budgets. For EC/EDI purposes, the key elements of the SPS are:

- a commercial software application that will perform standardized procurement functions,
- standard procurement data developed in conjunction with DoD Enterprise data standardization effort,
- a shared data warehouse that will permit receipt and distribution of standardized procurement data,
- and the DoD Defense Information Infrastructure(DII).

System acquisition, deployment, and support are managed by the Defense Logistics Agency's Defense Procurement CIM Systems Center (DPCSC).

2.1 Standard Procurement System Objective

The SPS's primary objective is improved procurement support for the Warfighter. To achieve that objective, the SPS application software will be deployed to each contracting activity and access provided to the shared data warehouse and the DII. The linking of standard software, standard data, the shared data warehouse and the DII will provide each contracting activity with an improved, standardized EC/EDI capability, facilitate the procurement process and thereby improve end user support.

2.2 DOD Procurement Electronic Data Interchange (EDI) Vision

The Director of Defense Procurement envisions an EDI capability for SPS that allows a complete exchange of procurement information with DoD contractors, among DoD's procurement activities, and across DoD functional areas, in a paperless environment. To accomplish that vision, the SPS application software is required to receive or generate information in ANSI X-12 format, populate the DoD procurement data base mapping to DoD standard data definitions, and operate within the DII communication parameters. Consequently, SPS will operate in any EC/EDI environment that is consistent with the DoD established criteria.

3.0 Analysis and Considerations

The following paragraphs describe specific issues related to EDI standards and legacy systems related to the SPS program and a short summary of other projects that are underway in the DOD Procurement community.

3.1 EDI Standards

SPS will use the national EDI standard, ANSI ASC X12, for its initial capabilities. Support for the UN/EDIFACT international standard will be added when that standard has been updated to include the required functionality for DOD procurement activity.

Initial X12 transaction set support will occur at Version 3050, using Federal implementation conventions (ICs). Federal ICs will be produced for X12 Versions 3060 and 3070 which will be incorporated into SPS as necessary to support DOD procurement activities and trading partners.

Initial UN/EDIFACT support is not expected until Spring 1998 with the release of UN/EDIFACT Version D.98A. Pilot programs with limited objectives may be executed earlier to gain experience with the UN/EDIFACT syntax.

3.1.1 X12 Transaction Sets

Initially, the SPS application software will generate or receive the following ANSI ASC X12 transaction sets and will interface with transaction set 838, Trading Partner Profile:

- 824 - Application Advice
- 836 - Procurement Notices
- 840 - Request for Quotation
- 843 - Response to Request for Quotation
- 850 - Purchase Order
- 855 - Purchase Order Acknowledgment
- 860 - Purchase Order Change Request -Buyer Initiated
- 864 - Text Message
- 865 - Purchase Order Change Acknowledgment/Request -Seller Initiated

Other X12 transaction sets being considered for SPS include:

- 503 - Pricing History
- 848 - Material Safety Data Sheet
- 869 - Order Status Inquiry
- 870 - Order Status Report

Until its functions are incorporated into SPS, the Pricing Workbench will provide support for:

- 251 - Pricing Support
- 805 - Contract Pricing Proposal

3.1.2 UN/EDIFACT

The DPCSC is participating with the ASC X12 Purchasing Subcommittee, the Pan American EDIFACT Board, and the UN/EDIFACT Joint Rapporteurs' Team to accomplish migration of functionality from X12 to UN/EDIFACT. The UN/EDIFACT messages expected to be initially generated or received by SPS are:

- REQOTE - Request for Quote
- QUOTES - Quote
- ORDERS - Purchase Order
- ORDRSP - Purchase Order Response
- ORDCHG - Purchase Order Change Request
- PRIHIS - Price History
- OSTENQ - Order Status Enquiry
- OSTRPT - Order Status Report
- SAFHAZ - Safety and Hazard Data
-

APERAK - Application Error and Acknowledgment

3.2 Legacy Systems

The functions performed by some legacy automated systems must be sustained until a fully functional SPS is deployed. The FY 95 and FY 96 reports required by Section 381 of the National Defense Authorization Act for Fiscal Year 1995 have been submitted to the Congress.

Many procurement AISs presently possess an EDI capability using older versions of the X12 standard or using proprietary standards. DPCSC has supported several projects to convert legacy system capabilities to the Federal 3050 IC, attaining a "single face to industry" across multiple applications. Upon completion, each of these AISs will transmit and receive data via EDI with the same appearance as SPS. This "single face" will allow replacement of legacy systems by SPS without disruption of EDI activity with DOD's trading partners.

Legacy systems converting to the Federal 3050 IC from earlier Federal IC's are:

APADE
DPACS
ITIMP

DPCSC is also providing an initial EDI capability using the Federal 3050 IC to a number of procurement AISs. This effort supports the DoD Comptroller's interests in obtaining standardized, electronically transmitted, payment information for major weapon systems contracts. These include:

AMAS
AMIS
PADDS
MOCAS

3.3 Other Procurement Projects

Other DOD Procurement EC and EDI projects are being funded, at least partially, and supported by DUSD(AR/EC), the DOD Electronic Commerce Office. Attachment 1 to this appendix contains a short description of each of them and also identifies which X12 transaction sets are being used.

PSA	Project ID	Project Title
Procurement	95AF XXX	Bar Coding
Procurement	95ARM 001	Acquisition Support Program
Procurement	95DCA 001	Electronic Pricing
Procurement	95DCO 001	EC/EDI Within DECCO
Procurement	95DLA 009	Subsistence Multi-Line Invoicing
Procurement	95UMC 005	Blount Island EDI
Procurement/ Acquisition	95NAV 002	Contractor Performance Reporting
Procurement/ Contract Management	95DLA 001	Progress Payment Request
Procurement/ Contract Management	95DLA 003	Plant Clearance
Procurement/ Contract Management	95NAV 006	Contractor Cost Data Reporting

Attachment 1 to Appendix E

PROJECT 95AFXXX
SUPPLY CHAIN MANAGEMENT & BAR CODE INTEGRATION
BUSINESS PROCESS RE-ENGINEERING EC/EDI

The existing process to order, track, and to pay for communication and computer equipment within the Air Force requires the use of numerous paper forms and other documents. The process starts with a user requesting systems that will enable the user to perform their job better through a C4 Systems Requirement Document (CSRD). The request is reviewed and, if approved by the AF Communication Squadron, turns into a request for purchase (AF Form 9). Once approved, the paper Form 9 travels through different offices for approval, review, and signatures with it ending up at Defense Finance and Accounting Service (DFAS) for commitment of funds. DFAS sends the paper Form 9 to the base procurement office to be manually entered into the base contracting accounting system (BCAS). The Procurement Office sends out a paper purchase order to the selected vendor. Paper copies of the purchase order are also sent to requesting organizations and to DFAS for obligation of funds. The vendor delivers the order to the Base Warehouse which, in turn, must notify the Communication Squadron and the requesting organizations through paper documents. Once the receiving organization accepts the equipment, the Communication Squadron sends DFAS paper documents for vendor payment and expenditure of funds.

The current paper system for ordering and tracking the procurement of communication and computer equipment is prone to errors, lost paper work, and re-keying of data into various proprietary systems. This scenario restricts the ability of organizations, in a timely manner, from tracking, payment, and accounting of equipment. By using Activity Based Costing it was found that a typical AF Form 9 cost over $2,000 to process. In addition, reviews of Prompt Payment documents found that hundreds of thousands of dollars were spent on interest penalties.

Electronic Data Interchange and Supply Chain Management (SCM) will eliminate the cumbersome flow of paper requisitions, purchase orders, invoices, shipping/receiving forms, technical specifications, and other documents for the acquisition of Automated Data Processing Equipment (ADPE) by replacing paper forms with electronic equivalents. In addition, SCM will provide a seamless, event-driven process that will save time and money. The user organization, DFAS, and Procurement can improve the accuracy and flow of information, which is essential to these organizations, by using the 511 (Requisition) transaction set to replace the Form 9 and the General Accounting Office (GAO) approved electronic signature/security system to provide for security and signatures. Using the AF MADES II/EDI system, Procurement will be able to send accurate and reliable purchase information in the form of the 850 (Purchase Order) to the Trading Partner (vendor). The Trading Partner will send an Advanced Shipping Notice (ASN), (transaction set 856 Ship Notice Manifest) to the Base Warehouse, thus allowing the Warehouse to promptly notify all interested parties of the date and time that the ordered equipment will be arriving. The ship notice manifest contains bar code information and related purchase order data which corresponds with the item ordered. The Warehouse scans the Bill-of-Lading off the packing slip which is then compared to the original 850 purchase order. An American National Standards Institute (ANSI) X12 861R, Receiving Certificate, sends receiving information to Procurement and DFAS which can update the Air Force inventory tracking system (Integrated Product Management System (IPMS). After completion of end user acceptance, an ANSI X12 861A, Advice Acceptance Certificate, is sent to DFAS so payment can be made to the Trading Partner. This process helps alleviate interest penalties and other costs. The use of the ANSI X12 854 will be used to notify the Trading Partner if a delivery discrepancy occurs. The ANSI X12 997, Functional Acknowledgment, is required for all transactions. The collection of the 997 will be used to create audit trails. The project will include a shared database assembled using EDI standards and other Commercial Off The Shelf (COTS) tools.

This project team consists of key personnel from Procurement, DFAS, Air Force Audit Agency, AFC4A, and inputs from the GAO.

PSA: Procurement

Lead DoD EC/EDI PM: Air Force, POC LT Matthew K. Miller
(310) 363-2080 DSN 833-2080

Technical Lead: Mr. Steven J. Lucks
(310) 363-1155 DSN 833-1155
Transaction Sets:

- 511 Requisition
- 850 Purchase Order (MADES II ver. 3010)
- 854 Shipment Delivery Discrepancy
- 856 Ship Notice/Manifest
- 861 Acceptance Certificate/Receiving Advice
- 997 Functional Acknowledgment

Status: Prototype (proof of concept)

Hardware and software upgrades, Contract Labor, component upgrades (HW/SW under $15K), and education.

PROJECT 95ARM 001
ACQUISITION SUPPORT PROGRAM (ASP)
PREVIOUSLY IDENTIFIED AS 95NAV017
JOINT ACQUISITION MANAGEMENT SYSTEM (JAMS)

In keeping with the facilities of the EDI technology, the ASP project is being developed to operate independently from existing application systems in order that the prototype can be exported to other sites. The project is led by the Simulation, Training and Instrumentation Command (STRICOM); the Air Force partner is Eglin Air Force Base and the Navy partner is the Naval Air Warfare Center-Training Systems Division (NAWCTSD) and a second Army partner is the Army Missile Command (MICOM). We will also work with the Defense Information Systems Agency (DISA), the Defense, Finance and Accounting Service (DFAS), and Defense Contract Management Command (DSMC) on this project. The EDI project is being managed under the Acquisition Support Program (ASP) umbrella, as this is the application in use by STRICOM and NAWCTSD and under evaluation by Eglin Air Force Base. ASP is a modular toolset which provides the following functionality:

- Integrated Management Information System (IMIS) - An integrated system for project management and tracking.
- Procurement Information Systems Management/Acquisition Professional (ProMIS/AcqPro) - Supports acquisition package development with ready access to an acquisition library including key acquisition regulations.
- Proposal Evaluation Tool (PET) - An automated multi-user source selection toll designed for a paperless environment.
- Automated CDRL and Tracking System (ACTS) - An automated tool supporting the development and tracking of Contact Data Requirements List (form DD 1432)
- Acquisition Tracking System (AcqTrack) - Provides members of program/project offices access to current information regarding project status.

The purpose of the systems acquisition EDI initiative is to incorporate EDI transactions for the entire project life cycle beginning with the RFP.

PSA Procurement

Lead DoD EC/EDI PM: Army, POC Donna Felix

(407) 384-3799
Transaction Sets:

- 196 - Contractor Cost Data Reporting
- 850 - Delivery Order
- 810 - Invoice
  855 - Delivery Order Acknowledgment
- 839 - Project Cost Reporting
- 860 - Delivery Order Change
- 840 - Request For Proposal
- 865 - Delivery Order Change
- 843 - Response To Request For Proposal Acknowledgment.

This project will prototype 3050 federal implementation conventions for those transaction sets marked with an asterisk above. In order to achieve the extended enterprise with industry using EDI transactions, the project will include some transactions not funded by OSD at STRICOM which will include: Contractor Cost Data Reporting (196), Project Schedule Reporting (806), Project Cost Reporting (839), and Specifications/Technical Information (841). STRICOM and its partners will coordinate with the designated OSD lead for these transactions.

Status: Prototype

The Air Force and Navy are currently evaluating proposed prototype weapons/training programs. The following Army prototypes and industry trading partners are as follows;

MICOM (Weapons Systems) Trading Partner
Patriot Missile System Loral-Vought, Raytheon

STRICOM Trading Partner
Advanced Distributed Simulation Technology (ADST) Lockheed Martin
Test Support Network (TSN) GTE
Fire Support Combined Arms Tactical Trainer (FSCAT) Hughes
Battle Lab Reconfigurable Simulation Initiative Hughes

PROJECT 95DCA 001
ELECTRONIC PRICING

Manufacturers frequently change the packaging of specific grocery items. In addition, promotions, sales, and coupon usage routinely alter the price of many items. Thus, prior to electronic pricing the Defense Commissary Agency (DECA) devoted significant resources to item pricing and maintenance activities, primarily at its regional offices. DECA processed more than 1.1 million price quote sheets for item pricing each year. Under the manual system, each of the six regions would individually receive the price quotes from manufacturers and brokers and key-enter them into their regional DECA Integrated Business System to be electronically distributed to all commissary stores located within their regions.

The electronic pricing process eliminated the need for pricing at the six different regional locations. Manufacturers and brokers transmit price changes to DECA Headquarters using the 879 (Price Change) transaction set. Prices are validated electronically and non-matching items are returned to the vendor using the 824 (Application Advice) transaction set. This system has improved the efficiency and effectiveness of maintaining the catalog master file and has significantly reduced pricing errors between DECA and commercial manufacturers. This process eliminated the need to perform price and item maintenance which had been performed at multiple DECA locations for an annual cost avoidance of $270,000.

DECA strongly encourages all business partners to send their prices electronically. Trading partners must be able to electronically send prices to DECA prior to DECA administering the Resale Ordering

Agreement (ROA) and allowing them the option of using the Electronic Funds Transfer (EFT) process.

DECA also offers vendors who send prices electronically the opportunity to use the Delivery Ticket Invoice (DTI) payment method using the delivery ticket as a basis for payment, eliminating the invoice from the bill-paying process. No documentation is required for payment, eliminating 11 associated processing and mailing costs (or EDI costs for the electronic invoice) including the costly reconciliation process for both DeCA and the manufacturer.

The electronic pricing will eliminate the need for manual data entry of monthly prices for over 200,000 resale items at six regional offices. There are many related cost avoidances that are gained by using this method of pricing versus the manual pricing that cannot be directly accounted for in the total ordering, receiving and selling process of DeCA's resale items.

PSA: Procurement

Lead DoD EC/EDI PM: Defense Commissary Agency,
POC Tom Hackett
(804) 734-8351

Transaction Sets:

- 824 Application Advice
- 889 Promotion Announcement
- 879 Price Change
- 997 Acknowledgment
- 888 Item Maintenance

Status: Deployment
Software Development and DeCA wide

PROJECT 95DCO 001
EC/EDI WITHIN DECCO

Currently, the Defense Information Technology Contracting Office (DITCO) has four functional areas: Pre-Solicitation, Solicitation & Award, Contract Administration, and Close-Out. DITCO performs the majority of procurements for telecommunications services in DoD and Federal Information Resource Management Regulation (FIRMR) resources. These procurements are done using manual methods and the Defense Electronic Bulletin Board Service (DABBS). A large number of these procurements of circuits are time-sensitive requiring the fastest possible processing and contractor response time available.

Under the DITCO Electronic Data Interchange (EDI) project, application interfaces will be developed to integrate EDI capabilities within DITCOs existing Customer/Vendor Interface (CVI) and network infrastructure. EDI will facilitate an expansion of the commercial industrial base supporting DITCO, provide greater and faster competition, reduce data entry time and costs, enhance data integrity, and provide greater access to common shared databases of contract and financial data supporting the telecommunications procurements.

The improvements will be in the areas of one time data entry, and improved financial and accounting services. The one time data entry will improve the effectiveness and efficiency of DITCOs operation by reducing the opportunity for data entry errors, eliminating duplicate entries and enhancing the integrity of the stored data. Our financial and accounting services will be enhanced by the implementation of Electronic Fund Transfer with both our customers and suppliers. This conversion will enhance the accuracy of our financial record while reducing the required labor hours.

PSA: Procurement

Lead DoD EC/EDI PM: Defense Commercial Communication Office (DCCO), POC Lisa Buckmann (618) 256-9587
Transaction Sets:

- 811 Consolidated Service Invoice
- 850 Award Document
- 820 Payment Order/Remittance Advice
- 855 Acceptance
- 824 Application Advice
- 860 Modification
- 836 Procurement Notices
- 864 Test Message
- 838 Trading Partners Profile
- 865 Response to Mod & Changes
- 840 Solicitations
- 869 Order Status Inquiry
- 843 Contractor Responses
- 870 Order Status Report
- 997 Acknowledgment

Status: Prototype

Security Risk Assessment, Data Modeling/ Interface with 840 and 843 Transaction Sets

Modeling/Interface with 810, 820, 850,and 856 Transaction Sets, Training and Supplies

---

PROJECT 95DLA 009
SUBSISTENCE MULTI-LINE INVOICING

Project:
To understand the current project it is best to start with a little history of Electronic Invoicing in Subsistence. The original Subsistence Electronic Invoice process was developed around Brand Names. This logic involved a single delivery per invoice. The original testing of the project was with Proctor and Gamble (P&G) but switched to Del Monte when P&G was unable to provide Contract Line Item Numbers (CLIN) back to Subsistence. These CLINs were needed to produce the results of line item accounting that the Government financial community wanted. The project was in the middle of testing with Del Monte when funds were exhausted. It was discovered during this time frame that P&G was not the exception but rather the rule in not being able to provide CLINs back to DPSC. Most of the food industry did not keep these numbers in their systems and were unable to provide them when we requested.

Any electronic solution is only as good as the number of documents and partners that are actively using the system. Because of our original problems with getting trading partners who could provide CLINs back to DPSC, the focus switched to developing a system which did not require vendors to provide CLINs back. The recent decision in using a summary invoice for prime vendor alleviates the need for this logic because the CLIN count will always be one. In addition, in the development of a distributed Electronic Invoice process (fresh fruit and vegetables (FF&V) Business Process Improvement (BPI) process, DPSC was able to solve the problem by providing the contract line items numbers back to itself.

The Subsistence Multi-Line Invoicing project is an enterprise project which adds electronic invoicing functionality to the current payment process. The Defense Systems Design Center (DSDC) has been chosen to do the programming for this project because it was the most cost effective solution. The funds for this project will be used to fund the project being done by DSDC.

The current project is the link between the logic and the newer contracting methods of long term

contracting. It builds on the functionality of the original project and allows the original module to accept multiple deliveries on the same invoice. This project is based on the current commodity set-up and targets the high volume, labor intensive areas first.

The programming involves modifications to current systems which allow processing of multiple call (delivery) invoices in lieu of the single line processing which was developed for Brand Name. In addition, funds will be used to program links between this process and the data which will be provided by the FF&V BPI system. Once these steps are completed, the process will be tested and trading partners in the FF&V and Prime Vendor areas will be added.
PSA: Procurement

Lead DoD EC/EDI PM: Defense Logistics Agency,
POC Jeffrey L. Nienstedt (215) 737-3860

Transaction Sets:

- 810 Invoice
- 805 Award Document
- 820 Payment Order/Remittance Advice
- 850 Grocery Products Invoice

Status Prototype

Deliverables:
The deliverables for this system consist of a working Electronic Invoice process for FF&V, Prime Vendor, and Depot Stock and automation of invoice data input for FF&V trading partners from our FF&V BPI.

PROJECT 95UMC 005
BLOUNT ISLAND EDI

The primary mission of the Blount Island Command is to plan and coordinate logistical support for the Maritime Prepositioning Ships (MPS) program and the land prepositioning program in Norway. Currently, the procurement of supplies and services are accomplished through a manual and paper based purchasing system. These requisitions are handed off to the purchasing office and are manually keyed into the procurement application for processing. This results in long lead time and delays for the upload/download and maintenance cycles of ships that provide support to contingency forces.

The objective of this Electronic Commerce/Electronic Data Interchange (EC/EDI) project is to provide the Blount Island Command personnel with an information systems which will automate their efforts to procure required supplies and services in support of the MPS Program and to manage large, single cost-reimbursement contracts. The target system for the procurement of supplies and services is the retail version of the Integrated Technical Item Management and Procurement (ITIMP) system. The target system for the management of cost-reimbursement contracts is the System for Integrated Contract Management (SICM).

Implementation of the target EC/EDI information system interchange system will provide Blount Island with a fully automated procurement system. This will reduce lead times, costs, delays, and enable the customer to establish a "just in time" inventory capability. In addition, the automated system will improve the management of logistics by providing accurate and timely data.

PSA: Procurement

Lead DoD EC/EDI PM: Marine Corp, POC Steve Butt (912) 439-5575

Transaction Sets:

- 840 Solicitation
- 843 Quotation
- 850 Purchase Order
- 854 Shipment Delivery Discrepancy Information
- 856 Ship Notice/Manifest
- 857 Shipment and Billing Notice
- 858 Shipment Notice
- 861 Receiving Advice/ Acceptance Certificate
- 862 Shipping Schedule
- 997 Acknowledgment

Status: Deployment

Hardware & Software, Installation of Retail Version of ITIMP or SICM

PROJECTS 95NAV 002
CONTRACTOR PERFORMANCE REPORTING

In a memorandum dated 25 January 1995, the Under Secretary of Defense for Acquisition and Technology directed that all services begin implementing Electronic Data Interchange (EDI) for program cost and schedule performance reporting, including the ANSI X12 transaction sets 839 Project Cost Reporting and 806 Project Schedule Reporting. The Naval Sea Systems Command (NAVSEA) and the Naval Air Systems Command (NAVAIR) have taken the lead within DoD for this move to electronic based systems for program management data. NAVSEA and NAVAIR have successfully conducted prototype tests to exchange program management data with selected contractors. To assist other services in implementing EDI for program management, a DoD EDI Working Group for Program Management has been established.

Current paper-based processes require contractors to submit monthly Cost Performance Reports (CPRs) for large scale contracts. CPRs provide early indicators of contract cost and schedule problems, and provide vital information for use in making and validating program management decisions. These reports can average over 200 pages in length and are typically sent to multiple government recipients. A great deal of time and effort is currently expended entering cost performance and schedule data manually into a variety of government software systems for analysis. This process is time consuming and error prone. In many cases the data is not timely enough for project analysis reporting which causes the accuracy of the data to suffer.

Some data may be submitted on floppy disk, which has its own consistency and reliability problems as each contract or program may dictate their own methods for electronic exchange. There is no one standard for the contractors to follow and the individual programs must pay for the unique methods peculiar to their contracts. When the contract requires the data to be submitted electronically (on floppy disk) the current proprietary formats do not conform to the ANSI X12 standard as directed in the Federal Information Processing Standard (FIPS) 161 "Train Sheet" Transaction Set. The lack of standardization often requires the contractor to supply the data both on paper and electronically, increasing the cost of generating the data required by the government.

The government can no longer afford the time or the personnel resources to manually enter data that is readily available on contractor application systems used to generate the paper reports. With the use of the X12 standards for EDI, the process of submitting program management data can be greatly improved and simplified, allowing personnel to do their jobs without being consumed by tasks that do not add value. The EDI standards provide a consistent way to receive all types of program management data in an application neutral format across all programs and services. This criteria provides consistency in format, while at the same time allowing the program manager to tailor the content of the data as necessary.
EDI will eliminate manual document processing, massive data entry efforts, validation, and error resolution. It will also provide a means to standardize reporting formats and data requirements allowing

analysis to focus on specific areas of interest without wading through pages of extraneous data. The overall cost performance reporting process can be streamlined into a faster, more efficient, and less costly system.

PSA: Procurement

Lead DoD EC/EDI PM: Navy (NAVSEA), POC
Mr. Mourad Yacoub (703) 602-1679x154

Transaction Sets:

- 839 Project Cost Reporting
- 806 Project Schedule Reporting
- 997 Functional Acknowledgment

Status: Prototype

Draft 806,839, and Analysis Reports.

NAVSEA Prototype between AEGIS Destroyer DRPM and Ingalls Shipbuilding initiated January 1995.

NAVAIR Prototype between V22 PMO & Bell Boeing initiated November 1995.

Final versions of all ICs.Testing with NAVSEA/Bath Iron Works scheduled to begin early 1996.

Continued expansion of Navy implementation.

Prototypes in AF and Army PMOs.

PROJECT 95DLA 001
PROGRESS PAYMENT REQUEST

The current system requires manual data-entry as well as manual interface with the Mechanization of Contract Administration Services (MOCAS). This process has resulted in the government occasionally failing to meet the requirements of the Prompt Pay Act, and has had an adverse impact on the activitys cash flow.

This project, when implemented. will allow contractors to electronically submit their progress payment requests and Material Receiving Reports (DD 250) to the Administrative Contracting Office and eliminate the need for paper processing and data entry. The progress payment aspect of this project is currently deployed and has resulted in a reduction of payment processing time, at the activity, from 16 to 20 days to 2 to 4 days. The DD 250 aspect of this program is currently under the functional testing stage.

PSA: Procurement

Lead DoD EC/EDI PM: DLA, POC Ron Kunihiro (703) 767-6338

Transaction Sets: 810 Invoice
856 Shipment Notice
997 Acknowledgment

Status: Deployment

PROJECT 95DLA 003
PLANT CLEARANCE AUTOMATED

REUTILIZATION SCREENING (PCARS)

The current system requires the contractor to mail the list of excess government property to the Plant Clearance Office where the information is manually processed. This process is labor intensive and takes approximately one to two weeks before an available items appear in the catalog.

The revised system will enable the contractor to transmit excess government property information electronically with all changes to the catalog appearing the next business day. The enhanced system will not only save time, money, and labor, it will provide more visibility to the excess property records.

PSA: Logistics

Lead DoD EC/EDI PM: DLA, POC Ron Kunihiro (703) 767-6338

Transaction Sets:

- 180 Return Authorization
- 511 Requisition
- 856 Ship Notice/Manifest
- 870 Order Status Report

Status: Deployment

PROJECT 95NAV 006
CONTRACTOR COST DATA REPORTING SYSTEM

The current process requires the paper transmission of a quarterly or semiannual Contractor Cost Data Reports (CCDR) and Contractor Performance Reports (CPR) for dozens of large scale production contracts that can average over 200 pages in length. Data currently comes in multiple contractor determined formats (although there are specific instructions and DoD formats) on a series of multiple forms. These reports are often late with the users being required to rekey data into the analysis application. This rekeying limits time spent on the actual analysis. There is a current backlog of four years of CCDR finals which have not been automated due to lack of funding for the manual data entry effort. This scenario restricts the cost analysts to using only portions of the data in a timely manner. Quality of cost estimates could be substantially improved if all CCDR data were available in an on-line database immediately after receipt.

Electronic Data Interchange (EDI) of contractor cost data will eliminate manual document processing and massive data entry efforts while providing for more accurate validation and greater error resolution. The proposed system will provide a means to standardize reporting formats and data requirements and allow analysis of the data to focus on specific areas of interest with out wading through pages of extraneous data. The overall CCDR reporting process will be streamlined into a faster, more efficient and less costly system. With the emergence of Performance Analyzer (PA) as a standard within DoD, the effects of EDI are even more pronounced since PA has a built-in interface to the ANSI X12 839 "Project Cost Reporting" transaction set.

The ability to share contractor cost information among the various Navy, and eventually DOD, organizations will be significantly enhanced. This program is designed to expand a Navy/OSD initiative into an integrated multi-service effort. The project will include a shared database assembled using EDI standards. The 196 "Contractor Cost Data Reporting" transaction set was developed by the ASC X12 Government Subcommittee and consisted of OUSD(PA&E) and Naval Air Systems Command personnel as well as representatives from private industry.

Estimates of cost savings indicate that after only two years of direct funding from OUSD (AR-EC) this project will begin to show a positive net benefit to the Navy. Beginning in FY 97, net cost benefit is expected to average nearly $60,000 per year.

PSA: Procurement

Lead DoD EC/EDI PM: Navy, POC Michael Lamatrice
(703) 604-3611 x2558

Transaction Sets:

- 196 Contractor Cost Data Reporting
- 806 Project Schedule Reporting
- 839 Project Cost Reporting

Status: Prototype

Hardware, Software, and Analysis, Systems, Integration, & Program Management

---

Table of Contents

DISA D7 Home Page

DISA Home Page

APPENDIX F - DOD LOGISTICS

1.0 Background

2.0 Basic Requirements

The following Logistics EC and EDI projects are being funded, at least partially, and supported by DUSD(AR/EC), the DOD Electronic Commerce Office. Attachment 1 to this appendix contains a short description of each of them and also identifies which X12 transaction sets are being used.

PSA	Project ID	Project Title
Logistics	95DCA 003	Distribution OCONUS Ordering
Logistics	95DLA 008	Hazardous Material Information System
Logistics	95DLA 015	BOSS Hazardous EDI
Logistics	95DLA 016	Export Transportation
Logistics	95DLA 020	Automated Bidset Sheets Interface
Logistics	95NAV 008	Non-standard Demand Reporting
Logistics	95NAV 010	Non-standard Materiel Request
Logistics	95NAV 012	Materiel Safety Data Sheets

3.0 Analysis and Considerations

Attachment 1 to Appendix F

Logistics Projects Supported by the DOD Electronic Commerce Office

PROJECT 95 DCA 003
DISTRIBUTION OCONUS ORDERING & RESALE SYSTEM

Defense Commissary Agency (DeCA) identified an opportunity to standardize and improve the efficiency and effectiveness of the Military Standard Requisitioning and Issue Procedure (MILSTRIP) process. DeCA reengineered the entire process and the resulting product was the "*DeCA Overseas Ordering and Receiving System*"(DOORS). DOORS is an Efficient Consumer Response (ECR) application within the DeCA Interim Business system (DIBS). Reduced to its essentials, DOORS is the mechanism which DeCA uses to replenish, either directly or indirectly, stocks of semi-perishable and perishable items in overseas commissaries.

DOORS provides this capability by electronically linking the Overseas Order Points (OOPS) to distributors and manufacturers located in the United States through the Order Processing Points (OPPS) located in the United States. This electronic linkage of OOPs and OPPs to the distributors and manufacturers who supply the products results in rapid stock replenishment by direct response to patrons demand, coupled with the maintenance of much lower inventory levels in overseas areas. In developing and deploying DOORS, DeCA moved away from the Defense Personnel Support Center (DPSC) as the means of providing overseas commissary stock replenishment.

Making this shift to DOORS is another application of DeCAs basic replenishment philosophy, which calls for "pulling" orders in direct response to patron demand, rather than "pushing" stocks overseas for reasons only indirectly related to patron demand. This is one more demonstration of DeCAs commitment to offer the very highest quality service to our patrons through an internal initiative complemented by cooperation of our industry trading partners. Both our patrons and our industry trading

partners are better served by consistently higher levels of stock availability, fresher products, and quicker appearance of new items that DOORS makes possible. Additionally, through DOORS, DECA can deliver a more cost effective benefit: The cost of the third-party support relationship with DPSC is eliminated (an annual cost avoidance of $1.2 million in overhead cost), and shorter order-ship time (reduced by 34 days) permits DECA to maintain a considerably lower dollar investment in inventory (by $300,000) at overseas locations.

On December 21, 1995, DeCA accepted the National Performance Reviews Hammer Award for success in reinventing government. DOORS was a major player in DECA success toward winning this award.

PSA: Logistics

Lead DoD EC/EDI PM: Defense Commissary Agency,
POC Tom Hackett
(804) 734-8351

Transaction Sets:

856 Advance Ship Notice 997 Acknowledgment
875 Grocery Product Order

Status: Demonstration & Prototype
Software Development and Prototype at Guam commissaries.

PROJECT 95DLA 008
HAZARDOUS MATERIAL INFORMATION SHEETS (HMIS)

Objective:
Develop ICs to provide a method for consistent usage of the ANSI X12.848 Material Safety Data Sheet (MSDS) transaction set and to develop an electronic format in partnership with industry to achieve both maximum acceptance and usage.

Project:
Trading partners seeking to do business with the government electronically should use these ICs in the design of their electronic hazard communication programs and translation systems. The Federal Government facilities that are prepared to accept MSDS via EDI will use these specified formats.

The Federal Acquisition Regulation (FAR) requires an apparently successful offer to submit a Material Safety Data Sheets (MSDS) to the solicitor for hazardous material. The Occupational Safety and Health Administrations (OSHA) Hazard Communication Standard (HCS), describes the purpose for and basic requirements of MSDS. The enclosed implementation conventions (IC) provide a method for satisfying these requirements electronically using the American National Standards Industry (ANSI) X12 body of standards for implementing Electronic Data Interchange (EDI). While certain data are mandatory in the ICs under the ANSI X12 standards, the ICs themselves are not an attempt to mandate a data set beyond what is defined in the HCS.

The ICs, do, however, specify the logic structure, data format, and level of detail consistent with the Federal Governments information systems. In addition, usage of two of the ICs is predicated upon the adoption of the ANSI Standard Z400.1, (Material Safety Data Sheets Preparation). The Federal Government endorses the usage of the Z400.1 but is obligated to accept any MSDS compliant under OSHA's Hazard Communication Standards.

The purpose of these ICs is to provide a method for consistent usage of the ANSI X12.848 (Material Safety Data Sheet) transaction set. The conventions were developed in conjunction and cooperation with the Joint Petroleum Industry Data Exchange (PIDX) and Chemical Industry Data Exchange (CIDX) Material Safety Data Sheet Working Group. They are consistent in content and intent with the guidelines

published by both of these industry groups. Because of the relative lack of standardization of hardcopy MSDS formats among the different industries and individual corporations, the Federal Government deemed it appropriate to approach an electronic format in partnership with industry to achieve both maximum acceptance and usage.

Trading partners seeking to do business with the government electronically should use these ICs in the design of their electronic hazard communication programs and translation systems. The Federal Government facilities that are prepared to accept MSDS via EDI will usethese specified formats.

PSA Logistics/Environmental Security

Lead DoD EC/EDI PM: DLA, POC Gene Cogdill (703) 767-2608

Transaction Set: 848 MSDS

Status: Demonstration

Deliverables:
Reports to evaluate the use of ongoing commercial efforts to standardize the exchange of MSDS by the government.

PROJECT 96DLA 015
BOSS HAZARDOUS EDI

Initiative:
The Base Operations Support System (BOSS) Hazardous is a post award contracting system for hazardous waste disposal. Processes handled by BOSS include generation of delivery orders and modifications to arrange for the pick-up, transportation and disposal of a waste stream, monitoring the movement of the waste through shipment manifests, receiving contractor certificates of disposal, authorizing contractors to invoice for payment and transmitting information to Defense Financial Accounting System (DFAS) Center to make disbursements. The current system of accounting for, and tracking, hazardous waste disposal is a manual, and labor intensive, paper based system. Hard copy delivery orders and modifications are printed, signed, copied, faxed, and mailed to the contractors, DFAS, our Defense Regional Management Offices (DRMO) and the generators, as required. Hard copy manifesting is mailed to the contracting offices. When received the manifest line items are checked against the delivery orders/modifications, and reviewed to insure proper handling and disposal. When this verification process has been completed the information is keyed into our database system. One to many relationships exist between line items and manifests. Each time a waste item is moved, until final disposal, a manifest is required. One line item may have multiple manifests due to movement of the waste, storage at alternate facilities, treatment, and disposal. Each manifest line item is entered individually into the system. Because of the requirement to re-key data, there is a high likelihood of error.

Under an electronic data interchange (EDI) environment, the entire process would be streamlined. Delivery Orders and modifications will be automated using 850 "Purchase Order", 855 "Purchase Order Acknowledgment", 860 "Purchase Order Change Request" and 865 "Purchase Order Change Acknowledgment" transactions sets. In lieu of issuing hard copy delivery orders/mods to the DRMOS, the systems will interface with the property accounting system, Defense Automated Information System (DAISY). The program will be expanded to include the capability for EDI exchange of hazardous waste line item detail to our generating activities. This will enable DRMS to streamline and automate the certification of manifesting data using EDI. When implemented BOSS Hazardous will automatically match interim and final manifest line items with pickup manifest line Items to facilitate accurate and timely reporting, while reducing manual data entry requirements. Requirements to incorporate Portable Input Tracker (PIT) technology (hand-held computer) and barcoding are also being researched and more clearly defined. DRMS has identified the requirement for imaging equipment to satisfy legal/litigation

issues for third-party/direct environmental clean up. Full integration of BOSS Hazardous data into the Single Hazardous Input Program (SHIP) is also planned. Payments will be authorized using evaluated receipts settlement procedures and disbursed using electronic funds transfer (EFT). These processes will result in a more streamlined business process, paper reduction, and enhanced monitoring capabilities to track hazardous waste from cradle to grave.

Current status. Functional testing of the 850 Transaction Set "Purchase Order" is complete. Awaiting readiness notification from pilot trading partners to begin production parallel test. Functional testing of 860 "Purchase Order Change Request" is expected to begin mid-January, 1996. Currently finalizing streamlined manifesting procedures and identifying requirements for evaluated receipts settlement the Logistics Management Institute (LMI) is working to ensure DRMS requirements are included in implementation conventions that are being developed. We anticipate that the testing of EDI transaction sets relating to manifesting and evaluated receipts settlement will begin in the May-June 96 time frame.

PSA Logistics/Environmental Security

Lead DoD EC/EDI PM: DLA, POC Sherry Underwood
(616) 961-7229
Transaction Sets:
810 Invoice
820 Remittance
860 Purchase Order Change
850 Delivery Order
861 Material Receipt
855 Acknowledgment
863 Certification of Disposal
856 Manifest
865 Acknowledgment

Status Demonstration

Deliverables

Functional Testing, Programming & Mapping Studies & Analysis, Imaging Hardware, Integration of BOSS into Single Hazardous Input Program

---

PROJECT 95 DLA 016
EXPORT TRANSPORTATION (EXTRA)

Currently, business practices at the Defense Personnel Support Center (DPSC) related to the shipping, tracking and monitoring of troop issue and defense subsistence cargo movements are a largely manual processes which is tied to paper based and telephonic systems. This results in a clerical and administrative burden which is manpower intensive and limits the time available to perform more meaningful logistics management functions.

This project will develop a personal computer (PC) based system for the electronic processing of cargo movement documents. The system will provide for enhanced shipment tracking as well as facilitating the timely requisition, procurement and transportation decisions in the DoD supply and transportation communities. As the distribution application determines how the requisition will be supplied [i.e. through source load, military distributor, depot, or Defense Subsistence Office (DSO) shipment], the EXTRA system will determine initial cargo van requirements for advance bookings.

When the contract award data on the material being shipped is available, final van requirements are determined by EXTRA and submitted directly to the overseas terminal operators. Capitalizing on commercial carrier automation efforts, DPSC will maintain in transit visibility on DOD shipments. Using 315 "Status Detail" transaction sets input either through EDI or other communications means, the

commercial carriers will provide continuing status reports from the time of pick up to and including delivery at final destination. These events include port of entry (POE) actual time of arrival (ATA) and POE actual time of departure (ATD). EXTRA reports will be requested by and produced on Cathode Ray Terminals (CRT) on an as needed basis with the ability to print on demand as minimally necessary. Real time processing will be utilized for those reports generated on a daily basis; the option for real time or batch processing will be supported for major reports generated less frequently.

PSA: Logistics

Lead DoD EC/EDI PM: DLA, POC Anthony Travia
(215) 737-2652

Transaction Sets:

214 Carrier message
300 Reservation
315 Status Report
301 Confirmation
856 Ship Notice
858 Shipment Information

Status: Prototype

PROJECT 95DLA 020
AUTOMATED BIDSETS INTERFACE

DLA can realize greater than 5 million in annual savings through the deployment of the Automated Bidsets Interface (ABI). The purpose of ABI is to facilitate the electronic dissemination of Engineering Data Lists (EDLs), Technical Data Packages (TDPs), drawings, and technical information in support of spares reprocurement solicitations. The ABI pulls data from the migratory systems Joint Engineering Data Management Information and Control System (JEDNUCS), Standard Procurement System (SPS) and the Technical Information Storage and Control Application (TISCA,); and then electronically transmits the 841 (Specification/Technical Information) Transaction Set under the 3050 conventions to the trading partner. ABI is a major step in the DoD mandated "Continuous Acquisition and Life Cycle Support/Electronic Data Interchange" (CALS/EDI) initiatives. Standard EC/EDI transmissions to trading partners will reduce vendor conversion costs and shorten procurement lead-times. Another benefit to this automated process is the improved quality and reduction in errors.

The ABI functionality was successfully tested during June 1995 in Columbus, Ohio at the Defense Construction Supply Center (DCSC). During the test the automated bidsheets interface pulled data from JETUCS, built the EDL, and electronically transmitted the data cut to a Value Added Network (VAN). Rear Admiral Elliot, Commander DCSC, was elated by the success of the test, and the potential of the ABI. "The test went well!", said Elliot. "The challenge now is to modify the business practices both in the government and private industry to take full advantage of this technology." Rear Admiral Elliot recognizes the immediate savings to the government through the utilization of the ABI, and fully supports further deployment to the three DLA centers at DESC, Dayton, OH; DISC, Philadelphia PA; and DGSC, Richmond VA.

Under the close supervision of Mr. Phil Altman, Program Manager, HQ DLA, ABI wiII be deployed to the three DLA centers. Further dissemination of the ABI will be pursued under the new name of Dissemination of Digitized Drawings for Reprocurement (DDDR) with potential deployment DoD wide.

The ABI has been developed through the joint efforts of the Federal Government and private industry. DLA and LOGICON (formally SYSCON) are coordinating this effort to bring this product to fruition.

PSA: Logistics

Lead DoD EC/EDI PM: DLA, POC Philip Altman (703) 767-2601

Transaction Sets: 841 (3050) Specifications/Technical Information

Status: Prototype to Demonstration in FY96

PROJECT 95NAV 008
NON-STANDARD DEMAND REPORTING

Procuring activities report non-standard purchases to the Navy Inventory Control Point (NAVICP) for the purposes of having a National Stock Number (NSN) assigned to items purchased that had been identified by their local stock numbers (LSN). This NSN identification reduces the number of non-standard local procurements and provides the benefits of centralized management of material.

Currently these reports are received in an 80 column format, as prescribed by Military Standard (MILSTD), with a document identifier code of "BHJ", (BHJ is a three digit document identifier code assigned to intra-Navy transactions related to inventory control systems.) These transactions are used to identify reports on the purchases of non-standard material (no NSN has been assigned). MILSTD's 80 column limitation inhibits the ability to accurately catalog the item for stock numbering because important data is often truncated (e.g., part number) or not transmitted due to the restriction of the Military Standard Transaction Reporting and Accounting Procedures (MILSTRAP) format. In addition reporting procedures are not standardized, and data is transmitted either pre- or post-award, depending upon the activity. Both pre- and post-award information is required as the pre-award part number may be obsolete and a replacement part purchased instead. Both part numbers should be cataloged under the NSN for cross reference purposes. Additionally, the original quantity from the requisitioner is required to ascertain the demand vice the amount actually purchased. In many cases the customer may only need "one each" of an item but the vendors minimum order quantity is higher. This results in excess inventory of these non-standard items with no visibility of these excess items to other Navy procuring sites because of the LSN which, under the current system, has no meaning beyond the local activity. This results in the different buying activities purchasing the same items with identical minimum quantity problems.

In order to correct the existing situation the Navy's initiative will develop a new procedure which will utilize the current Automated Procurement Accounting Data Entry (APADE) process and Electronic Data Interchange (EDI). Which, when implemented, will pull specific elements from the APADE System to assist the activity in the accurate and timely identification of these purchases. This data will be transmitted directly to NAVICP in Mechanicsburg where it will compile product demand information which will then be utilized to improve the Navy's cataloging.

The new format accommodates variable length data, and will be reported real-time on both requisitioner request and upon the award of a contract. Both pre and post- award data will be received. If the original requirement for an obsolete item results in procurement of its replacement, both part numbers will be cataloged under one NSN for cross reference purposes. If a local stock number is not reported, one will be assigned. This information will be used to populate a non-standard database which will be distributed to the field by NAVICP Mechanicsburg. Visibility of excess assets, caused by the minimum order requirements, via the local stock number should eliminate some of the buy requirements. The cross referencing of obsolete/replacement part numbers also eliminates the need for many LSN procurements as the NSN will be requisitioned instead. New NSNs will be assigned to those items that meet the criteria.

Implementation of a standardized, electronic, real-time reporting system will result in improved supply support. Inventory cost, labor and local procurement efforts will be reduced. Use of variable length records and an improved data transmission will facilitate NSN assignment, provide non-standard

material visibility, and improve inventory management practices. This program will automate demand processing and be expanded to accommodate specific service/DoD requirements and cataloging criteria.

PSA Logistics

Lead DoD EC/EDI PM: Navy, POC Diane Sechrist
(717)790-2548, DSN 430-2548

Transaction Set: 867 Product Transfer and Resale Report

Status: Prototype

DoD EC/EDI Funding: FY95
$278K Mapping, Software, and Project Management Support

FY96
$249K Hardware and Project Management

PROJECT 95NAV 010
REQUISITIONING OF NON-STANDARD MATERIAL

Prior to procurement of items of supply, they must be properly identified and described, either by the requisitioner when submitting the original request, or by other personnel in the supply system at some point prior to procurement. This is the "technical screening" process. For material formally identified by National Stock Number (NSN), technical screening is part of routine cataloging procedures. However, over 500,000 non-standard requisitions are submitted each year which have predominately required manual review for technical screening.

While many of the Navy supply processes have been automated over the years, the non-standard requisitioning process remains bound in a manual, paper environment. During visits to ashore and afloat activities to ascertain their need for more expedient technical screening methods, it was discovered file drawers full of old paper messages, cumbersome technical manuals, drawings and microfiche were still being utilized. The Fleet and Industrial Supply Centers (FISCs), working as regional providers of services, as well as individual screeners were not able to share data; therefore creating redundancy, long lead times and unnecessary delays in the procurement of non-standard items.

As part of the FISC interweaving initiative, a working group was established to examine further the feasibility of centralizing the function and identifying possible dollar savings without loss of service to the customer. Therefore, the Naval Supply Systems Command (NAVSUP), in its continuing efforts to reduce costs of operations through standardization, centralization, and downsizing, adopted a methodology to consolidate the requisitioning process at the Naval Inventory Control Point (NAVICP), with a Host module residing at NAVICP Mechanicsburg, the Central Technical Activity (CTA), a customer support module at each user activity and a storefront module at each FISC to manage problem-case requisitions.

The Automated Non-Standard Requisitioning System (ANSRS) is an automated (paperless environment) program which performs a basic-level technical review (customer level) of each requirement, generates an electronic requisition, downloads requisition and forwards to the CTA/FISC. ANSRS automatically screens incoming electronic requisitions through the CTA and generates status in the NAVICP Document Status File (DSF). Validations and edits are built into the system and communication between all participants occurs via the Streamlined Alternative Logistics Transmission System (SALTS)/Electronic Data Interchange (EDI), and the Military Standard Transaction Requisitioning and Issue Procedures (MILSTRIP) via Uniform Inventory Control Program (UICP)/Uniform Automated Data Processing System (UADPS)/Shipboard Uniform Automated Data

Processing System (SUADPS) transmissions, so as to maintain status and demand criteria. The system screens out exceptions and queues those items with inadequate data for manual review. As part of this process, ANSRS produces a database of all non-standard requisitions, resident, maintained and updated at the CTA. A tailored version will be distributed via CD-ROM as part of the customer and FISC/storefront modules. As records on new items are added to the CTA non-standard database, providing historical data and past procurement history, the program will become more proficient at screening requisitions, expediting technical screening of subsequent requisitions for same or similar items. Savings with respect to purchase of hazardous materials and storage of these materials will be realized since each technical screener at the customer, FISC and CTA level will have access to technical information identifying these items and the methodology necessary to process them correctly.

Implementing EDI within ANSRS will provide a standard format so that a system interface can be designed. This will allow customers to provide more complete and accurate information and reduce lead times and delays. In addition, EDI will allow the flow of non-standard demand data from the procurement system to the NAVICP.

ANSRS is well into the developmental stage with its prototype date (March 1996) on track. The centralization of the non-standard requisitioning process at the CTA will create a central repository for data to allow collection of part-numbered information, visibility of all part-numbered buys and will facilitate faster and more efficient service to the customer. In the long-run, as ANSRS propagates and assimilates users, the cost of processing non-standard buys will decrease and will ultimately drive down the total weapon systems support costs.

PSA: Logistics

Lead DoD EC/EDI PM: Navy, POC CDR Tom Williams
(703) 607-0926

Transaction Set: 511 Requisition

Status: Prototype

Project Management Support, Mapping and Software, Integration, Analysis, Project Management, and Deployment Plans

---

PROJECT 95NAV 012
MATERIAL SAFETY DATA SHEETS

The law requires that the manufacturer provide a material safety data sheet (MSDS) for any of their products containing hazardous chemicals. The Defense Federal Acquisition Regulations Supplement (DFARS) requires that the services obtain an MSDS with each procurement of hazardous material. There are other DOD business rules that require the MSDSs to be submitted by the procurement officials to their service focal point. These focal points have industrial hygienists review the "paper" MSDSs. This review consist of weeding out duplicates, quality control, and adding data such as logistics related information. The manufacturers MSDS are then rewritten to conform to the DOD format. When this conversion has been completed the information is placed on a floppy disk and mailed to DODs Material Safety Data Sheets Central Repository. These steps are labor intensive and cause delays in getting the material safety data sheets to the users of the products

The current practice is for the vendors and/or manufacturers to submit the safety data sheets by mail in the format that they, the vendor, are most familiar. The change in the simplified acquisition threshold from $25,000 to $100,000 has led to an increase in the use of individual purchases by the buying activities. The net effect is an increase in the volume of individual material safety data sheets being received at the central control point. The current paper treadmill system is overburdened and getting increasingly slower in getting the MSDS to the users.

With the continuing industry interest and participation in this effort it will result in the focal points being able to receive electronically transmitted and structured MSDS. When fully implemented with a license plate, which is a Universal Product Code (UPC), to link the product to the MSDS, it will reduce the current processing costs by approximately 50 % and allow the industrial hygienist to focus more on their areas of expertise. Another benefit will be easier tracking of the movement of hazardous material within DoD activities.

PSA: Logistics/Environmental Security

Lead DoD EC/EDI PM: Navy, POC George Ganak
(703)607-0245

Transaction Sets: 848 MSDS
997 Acknowledgment

Status: Prototype

Initiated development of data model for MSDS exchange between DoD and contractors. MSDS EC Strategic Plan, (50% complete) Development of Trading Partner Toolkit, Complete Strategic Plan, Implement data at one Army, Air Force and GSA site type application of Standard Generalized Mark-Up Language to MSDS EDI.

Table of Contents

DISA D7 Home Page

DISA Home Page

APPENDIX G - DOD AGENCIES

1.0 DLA (POC DLA/MMPRS)

1.1 Background

DLA maintains five (soon to be four) inventory control points which are responsible for purchasing, supplying and managing specific commodities. Each center has a requirement to exchange information internal to DOD and additionally to conduct business with commercial vendors and suppliers

Prior to the development of the DOD EDI infrastructure, DLA used the capabilities and services of the Defense Automatic Addressing System Center (DAASC) to enable the implementation of EDI for the Agency. Exhibit G.1 - DLA Architecture, provides a pictorial representation of the current architecture.

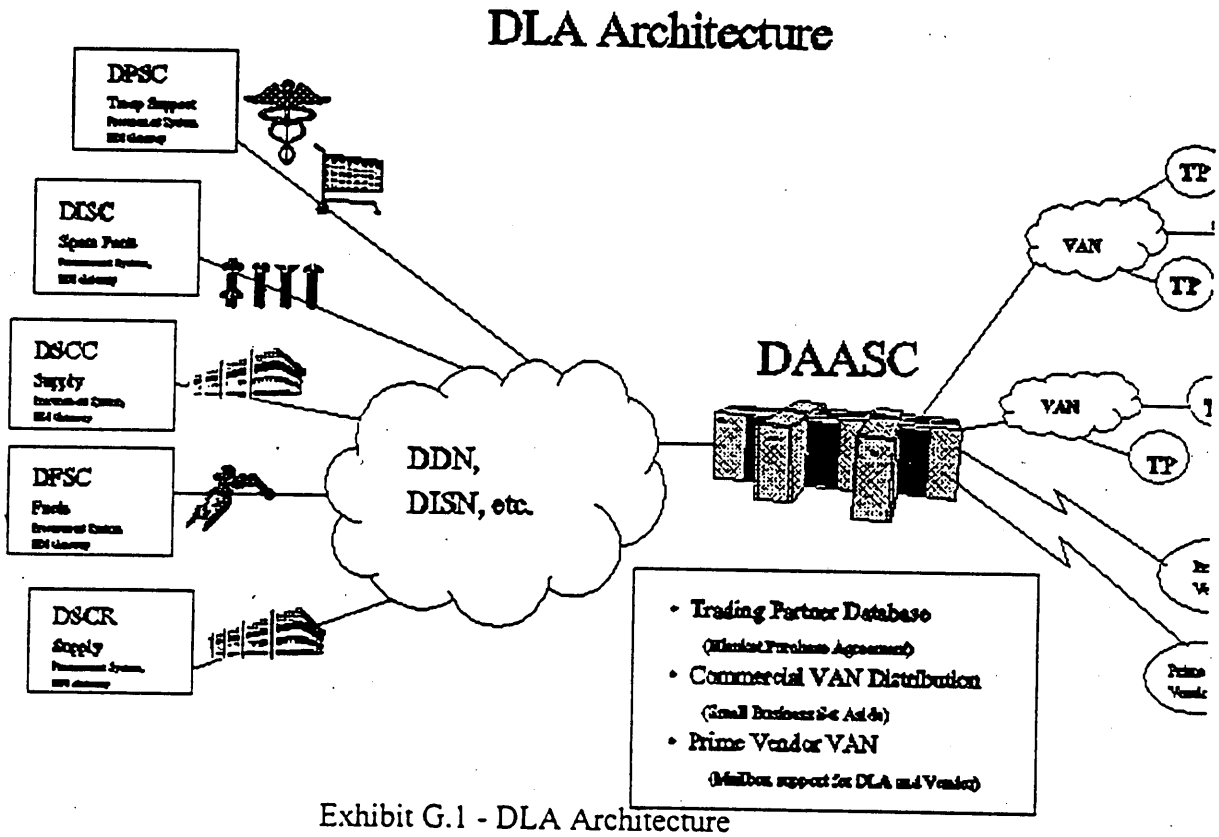

Exhibit G.1 - DLA Architecture

The Defense Automatic Addressing System Center (DAASC), which is located in Dayton, OH and Tracy, CA, currently supports the following major DLA EDI requirements:

- Routing of Military Standard (MILS) formatted information among DOD entities.
- Conversion of the MILS data to X12 transaction sets to conduct business with commercial industry.
- Management of the trading partner database.
- Access to approximately 20 plus commercial Value Added Networks (VANs) and Value Added Service (VAS) providers for blanket and small business set aside purchasing.
- Setup and maintenance of Prime Vendor mailboxes.
- Provide Continuity of Operations (COOP) through mutual backup.

The majority of the materiel management, depot maintenance and distribution systems/applications are Defense Logistics Support Systems (DLSS). These formats are used not only to exchange information

internal to DOD, but to conduct business with commercial vendors and suppliers. The two other functional areas, Medical Logistics and Transportation, have several X12 programs being supported outside of the DLSS/DAAS arena.

DLSS has been using MILS formats since 1962. As commercial industry began to develop and implement X12 as the electronic data interchange standard, the logistics community recognized and responded to the migration. Defense Logistics Management Standards Office (DLMSO) developed and published 54 implementation conventions for 26 X12 Transaction Sets enabling the conversion of MILS to X12.

Plans have been developed by the Joint Logistics Systems Command (JLSC) to migrate the DLSS from the MILS to a more open architecture, Modernization of the Defense Logistics Standard Systems (MODELS), using X12 as the main electronic data interchange standard.

1.2 Requirements

Each of DLA's organizations uses X12 to support the purchasing process; however, DLA is using implementation conventions that are not consistent with published DOD ICs. DLA will migrate to the DOD/Federal ICs to the maximum extent possible, in keeping with best business practices. Consistent with the recently redefined DII structure, DLA will continue to process non-public EDI transactions through the DAASC. DLA has been and continues to work closely with DISA to migrate all public (procurement) traffic to the NEPs/ECPNs. DLA and DISA will encourage non-DOD certified VANs currently connected with DAASC to initiate the process of certification.

DLA requires 24-hour receipt acknowledgment of transactions sent.For DLA to provide technical drawings (ASC X12 841 transaction) within the required 24 hours, large transactions (approaching 2 MB) must be supported by the DISA EC and EDI infrastructure.

1.3 Analysis and Considerations

One of DLA's business strategies is to establish long-term business and contractual relationships with suppliers. These contractual arrangements ensure a steady flow of supplies to the customer at the best prices. Often, EDI transaction exchanges are a part of these contracts. DLA realizes that DOD cannot dictate business practices to all segments of the vendor community. When commodity specific vendors choose to use industry accepted ICs in lieu of the DOD/Federal ICs, DLA will attempt to accommodate the non-standard ICs while encouraging the vendor's to consider making use of the DOD/Federal ICs.

With the exception of one VAN that DAASC has a contract with for interconnect service, all VANs connected to DAASC are conducting business at no cost to the Government.

Although only a small percentage of DLA procurements fall into the small purchase category (the majority fall into the micro purchase range -under $2,500), DLA is actively working with DISA to test the capabilities of the NEP and ECPNs in order to allow the migration of public transactions to the DOD EDI (FACNET) infrastructure. Once the migration occurs, DLA anticipates receipt of FACNET certification.

Fee-for-service rates for using the DOD EC and EDI Infrastructure has caused problems for Agencies/Services trying to budget for these costs and to anticipate changes in costs.

2.0 DeCA (POC DeCA)

2.1 Background

2.2 Requirements

2.3 Analysis and Considerations

Table of Contents

DISA D7 Home Page

DISA Home Page

Department of Defense Electronic Commerce (EC) Requirements, Systems, and Implementation Strategy Version 1.4 Dated 17 October 1996

TABLE OF CONTENTS

Acknowledgements and Memorandum

1.0 EXECUTIVE SUMMARY

2.0 OVERVIEW

3.0 REQUIREMENTS

4.0 SYSTEMS BASELINE

5.0 STRATEGY

APPENDICES

Appendix A -DOD DUSD(AR/EC)
Appendix B -DOD Finance and Accounting
Appendix C -DOD Transportation
Appendix D -DOD Medical Logistics
Appendix E -DOD Procurement
Appendix F -DOD Logistics
Appendix G -DOD Agencies
Appendix H -Military Services
Appendix I -Federal Civilian Agencies
Appendix W -DISA Support Capability
Appendix X -Issues/Actions
Appendix Y -References
Appendix Z -Glossary

Downloadable Files

Cover, Foreword, and Sections 1, 2 secs1.zip.
Sections 3, 4, and 5 secs2.zip.
The Appendices apps.zip.

The above are WordPerfect© zipped files for downloading only. **Download instructions:** Create a subdirectory then download the files into subdirectory by selecting the file using your right mouse button if your left mouse button is the default. If your right mouse button is the default, use your left button. The prompt should be "save this link as" or "load to disk" where you can choose a directory to save it in. Use Winzip© or a similar program to unzip the zipped files.

Download Winzip© here.

For additional information contact:
Jim Mulder mulderj@ncr.disa.mil or
Audrey Lofton loftona@ncr.disa.mil

APPENDIX H - MILITARY SERVICES

1.0 ARMY(POC Army)

2.0 NAVY(POC Navy)

3.0 AIR FORCE(POC USAF/SCTT)

4.0 MARINE CORPS

Table of Contents

DISA D7 Home Page

DISA Home Page

APPENDIX I - FEDERAL CIVILIAN AGENCIES

1.0 FEDERAL PROCUREMENT(POC DUSD(AR))

1.1 Background

The President's Management Council chartered the Federal Electronic Commerce Acquisition Team to develop the Federal electronic commerce architecture. The procurement community is implementing EDI using *Streamlining Procurement Through Electronic Commerce* as its blueprint.

One of the outcomes of the Federal Procurement Streamlining efforts was the establishment of the Federal Acquisition Network (FACNET). The FACNET is not, as is implied by its name, a physical hardware network, but rather a set of parameters, built along functional lines, to be used by Government and private users when implementing EDI. The FACNET is designed to:

- Inform the public about Federal contracting opportunities
- Outline the details of Government solicitations
- Permit electronic submission of bids and proposals
- Facilitate responses to questions about solicitations
- Enhance the quality of data available about the acquisition process
- Be accessible to anyone with access to a personal computer and a modem.

1.2 Basic Requirements

The procurement community is currently implementing EDI primarily for Small Purchase Procurement (over $2,500 and under $100,000) using the DII to provide the "single face to industry." Other procurement activities are sending X12 transmissions but those are not using the DOD EDI architecture for transaction set distribution. The DII is available to and is being used by many federal agencies which have been certified by DOD to use it. These activities support 98% of the small purchase procurements. In addition, they support large procurements and many of the small purchases which are awarded to large and small contractors.

As commercial vendors are continuously being registered to do business with the federal government electronically, it is expected that the amount of test traffic will remain relatively constant and the amount of production traffic will continue to increase.

The Electronic Commerce Acquisition Team (ECAT) recommended an acquisition architecture centered around a "virtual network" for delivering standardized transactions to facilities accessible to value-added networks (VANs) and other entities as well as for delivering transactions.Initially the Agencies will connect through the DOD Network Entry Points (NEPs) for access to the VANs. The ECAT has recommended that other Federally-owned NEPs be established so the Agencies will have a choice of connections into the Virtual Network.

1.3 Analysis and Considerations

The ECA PMO has agreed to use the NEP portion of the DOD EC and EDI Infrastructure for VAN connections. It has allowed agencies to establish their own EDI gateways and internal and external communications support.

The ECA PMO has encouraged regular contact with the DISA Center for Standards Management Committee to resolve IC conflicts and to develop government-wide ICs.

Some Agencies have implemented EDI differently from other Agencies. Even within the same Agency operating at different locations, EDI is implemented differently. Individual agencies are permitted to use multiple gateways, running on different hardware, software, and use different ICs to exchange the same

types of X12 transactions. This has required the DOD EC and EDI Infrastructure to develop multiple ways to handle Federal sites. Federal sites must establish standard ways to provide site information in a timely fashion to the DOD, NEPs and certified VANs. Stove-pipe implementations are developed without a consolidated agency approach.

Table of Contents

DISA D7 Home Page

DISA Home Page

APPENDIX W - DISA SUPPORT CAPABILITY

(POC DISA - D7)

1.0 DISA Support Capability

This appendix describes the methods that DISA uses to provide EC and EDI support to its customers, the Defense community and the Federal civilian agency community. It is intended to be an evolving appendix to the EC and EDI strategy document and will be updated periodically as new information becomes available.

This appendix provides the need for EC in DOD, including a brief history of the events leading to today's programs. It gives an overview of DISA's processes for gathering the requirements for customer support, and a high level view of the plan for maintaining and upgrading the DOD EC/EDI infrastructure. It also describes the environment to be used for developing new EC/EDI implementations, provides an overview of DISA's approach to EDI standards management, and discusses how the Global Combat Support System (GCSS) fits into the EC and EDI picture.

1.1 Electronic Commerce

Recent experiences in the DOD (e.g., Medical Logistics) have proved the effectiveness of EC to rapidly procure critical items, reduce costs, simplify business transactions, reduce paperwork, decrease inventory, and increase transaction reliability. Despite its benefits, EC throughout the DOD is being implemented through a multitude of Service and Agency initiatives with disparate directions. DOD components use a variety of platforms, processors, networks, and transaction data standards to conduct EC. The systems are "stove-piped" and many use proprietary software and communications protocols. To do business electronically, an industry trading partner has to meet a different set of requirements for each DOD activity. Current efforts to solve these problems have focused on small purchase procurement. The scope of EC must be expanded to include government-to-government traffic as well as traffic between government and industry trading partners for Contract Administration, Transportation, Supply Management, Financial Management, Maintenance, and Engineering.

EC/EDI has the potential for improving Federal Government operations, including our ability to sustain US forces, by streamlining procurement, logistics, personnel, medical, transportation, financial, and reserve component functions. The GCSS EC/EDI product area provides common EC/EDI services and infrastructure so that DOD functionals, and functionals in other Federal Agencies, do not have to duplicate and pay for these capabilities individually. Common standards assure that EC/EDI applications used for combat support functions can interoperate with those used by other Federal Agencies and our trading partners in industry.

1.2 Electronic Commerce/Electronic Data Interchange

This section will begin with a brief summary of the background that led to the requirements for that portion of the DII needed to support the scope and objectives of EC/EDI. The next section will briefly focus on the cross-functional requirements process performed by DISA. It is followed by a focus on the EC/EDI infrastructure upgrades and schedule. Discussions of the standards program and GCSS will complete this appendix.

1.3 Background

On July 22, 1993, the Deputy Under Secretary of Defense (Acquisition Reform) chartered a Process Action Team (PAT) to assess existing capabilities to conduct DOD contracting actions using EC. The team found DOD components used a variety of platforms, processors, networks, and transaction data standards to conduct EC; the various systems were often stove-piped and many used proprietary software and communications protocols. To do business electronically, an industry trading partner (a

commercial entity desiring to do electronic commerce) had to meet a different set of requirements for each DOD activity.

On December 20, 1993, the Secretary of Defense approved the PATs recommendation to initiate a 24-month program to establish a DOD standard, centralized EC/EDI infrastructure. The Defense Information Systems Agency (DISA) was tasked to be the technical implementor of the PATs recommended architecture.

Vice President Gores National Performance Review mandated the establishment of a Federal Government-wide EC program for federal acquisition below a specified dollar threshold. In response to this policy statement, the Federal Electronic Commerce Process Action Team prescribed the use of DODs EC/EDI infrastructure for civilian Federal Government agencies.

On June 23, 1995, the Assistant Secretary of Defense (Command, Control, Communications, and Intelligence) mandated that the EC/EDI infrastructure support electronic business in all functional areas. At that time, DISA was tasked to "establish an EDI infrastructure implementation advisory group consisting of Military Services, Defense Agencies, and other appropriate participants, representing as a minimum, the functional areas of Procurement, Health, Finance, Human Resources, Logistics, Environmental Security, and Reserve Affairs."

Clearly, the scope of the EC/EDI project must encompass transactions beyond small purchase procurement, including government-to-government traffic as well as traffic between government and industry trading partners. To efficiently accommodate electronic business for the expanded scope of functions, the EC/EDI infrastructure will incorporate EC technologies beyond EDI.

2.0 DISA Cross-Functional Requirements Gathering

Exhibit W.1 illustrates the elements involved in driving EC and EDI cross-functional infrastructure requirements. DOD and Federal functional customers are the prime generators of requirements. DISA is the implementor of the requirements. The requirements process and its supporting structure is the methodology by which user needs are integrated into DII programs. To facilitate this process, DISA/D7 has integration managers assigned to assist functional customers at the CINCs, Services, OSD and Agencies.

The evolution of a requirement begins as depicted in Exhibit W.1. By looking at the total customer need the ability to leverage data gathering and provide a better integrated suite of products and services to the customer is improved.

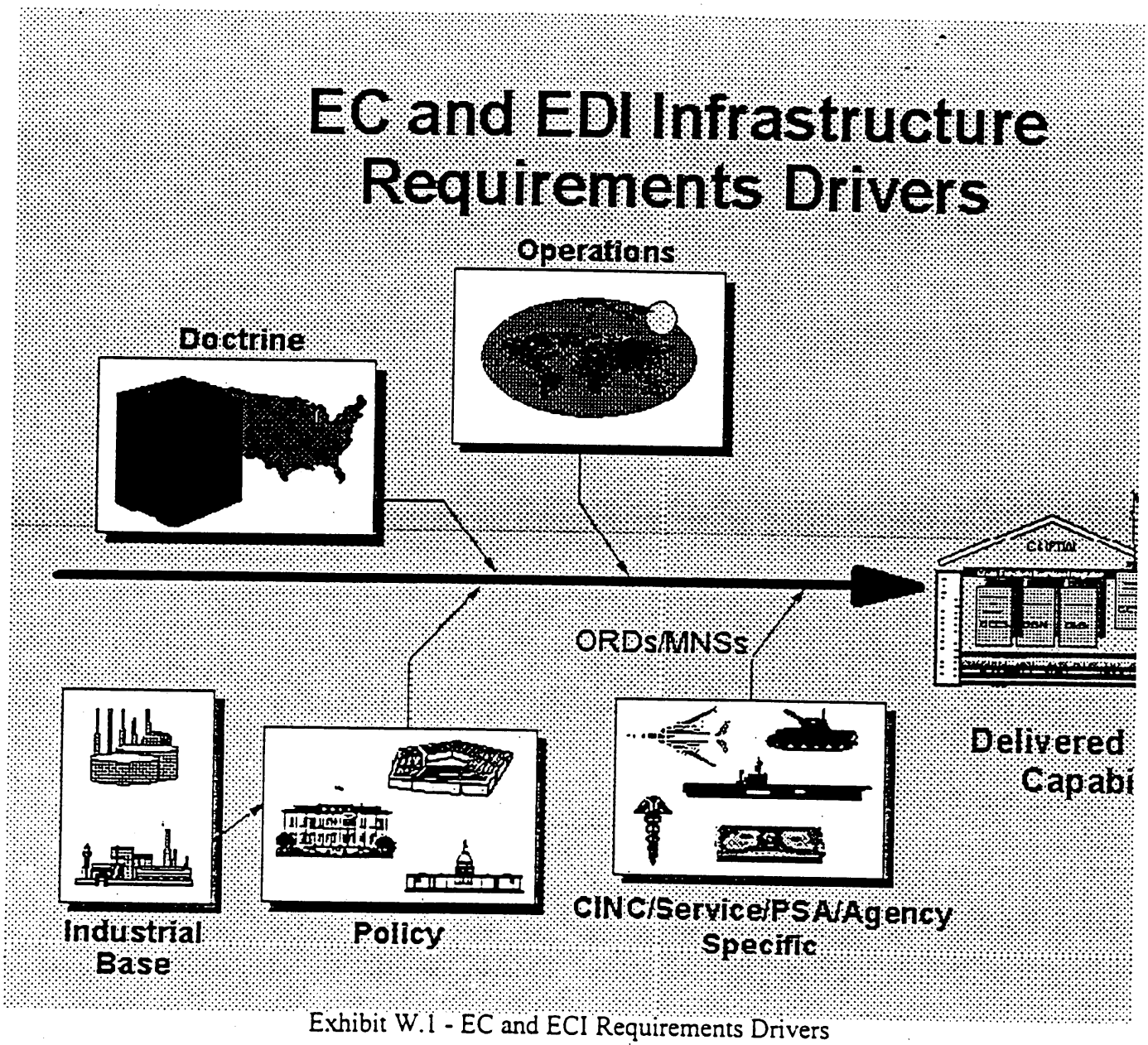

Exhibit W.1 - EC and ECI Requirements Drivers

Requirements are analyzed continually for their insertion into the design and development process. Cross-functional requirements that can quickly lead to improved interoperability are given priority in the process. Reflected in the next section are the near term requirements that will lead to an enhanced EC/EDI infrastructure.

3.0 Infrastructure Upgrades and Schedule

During FY96, the focus will be on phased development of the ECPN operations consolidating the NEP and gateway functionality. Other activities will be integration and continued development of the Contractor Registration System, program translators and the phased elimination of the gateways, and phased communication media transfer. Once all of the workload is transitioned to the new architecture, future infrastructure upgrades will coincide with the identification and validation of the requirements in each of the new business areas projected to use the EC/EDI infrastructure. A list of past and future upgrades follows:

First Quarter FY96

Hardware delivery/configuration of new ECPN architecture at Slidell, Columbus and Ogden

Establishment of engineering developmental site

Network management, relational databases, automated auditing, rudimentary error processing

Second Quarter FY96

Formal Testing of ECPN software version 1.0

Development of operational manuals/training materials

Configuration management of operational infrastructure configuration

Operator Training

Provide hardware/software tools to CSC for on-line transaction status

ECPN software installation

User/operator acceptance testing of architecture

FOC of ECPN software version 1.0

Elimination of SAACONs/AF gateways, consolidation of functionality into ECPN

Software development of enhanced error processing, integrated archival database/off-line transaction storage

CCR initial ECPN integration

Third Quarter FY96

Elimination of remaining gateways

Development of version 1.2

CCR fully integrated into ECPN

Automated workload allocation system

Fourth Quarter FY96 through FY97

Software enhancement for identified customer requirements

Hardware capacity upgrades

Mass data storage capability

Transfer of new functional areas onto the infrastructure

Version 2.0 of enhanced software

FY98

Capacity upgrades as required

Continued requirements validation of new functional areas

Software development of ECPN functionality to meet additional requirements

FY99-00

Continued software development to meet changing/evolving customer requirements

Exhibit W.2 below summarizes the EC/EDI Product Area Schedule.

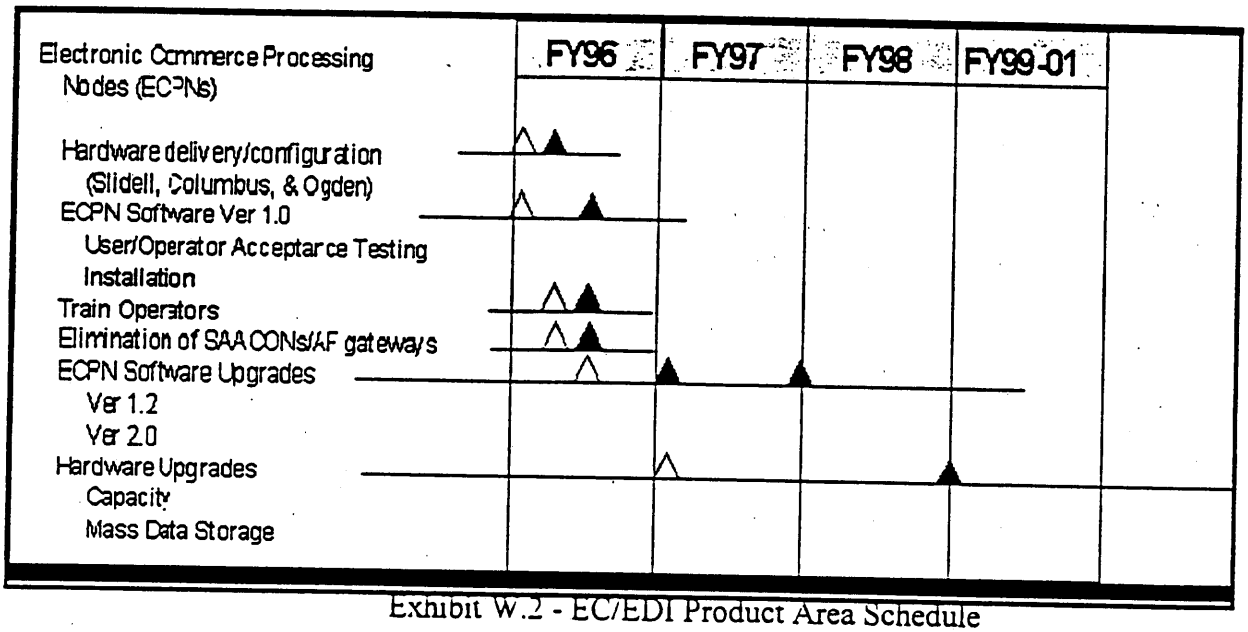

Exhibit W.2 - EC/EDI Product Area Schedule

4.0 Development Environment

Typically, the development environment for new or transitioned EC and EDI projects will be the DISA Compliance Test Facility Electronic Commerce Processing Node at Slidell, LA. DISA will provide the configuration control necessary to ensure that implementations under development will be isolated from the production environment and that they are created according to the agreed upon specifications. Special tracking and testing will be performed when developing cross-functional EC and EDI implementations.

5.0 Standards

DISA is responsible for maintaining DOD information technology (IT) standards and conventions. Within DISA, the Center for Standards, part of the Joint Interoperability and Engineering Organization, is the configuration manager for DOD EC and EDI standards and Implementation Conventions (ICs). The DOD EDI Standards Management Committee supports the development, adoption, publication, and configuration management of EDI ICs for DOD.

5.1 Standards Management

Since the purpose of an EDI implementation is to exchange EDI information among disparate, independent business entities, strict conformance to broadly agreed information technology standards is paramount. Although many Military Services and Defense Agencies use standards to conduct business with private industry, coordination of standards usage throughout the Department of Defense remains a critical need. For the most part, American businesses use, or plan to use, the American National Standards Institute (ANSI) Accredited Standards Committee (ASC) X12 standards for exchanging data through Electronic Data Interchange (EDI). DOD is committed to the uniform use of standards and Draft Standards for Trial Use (DSTU).

When implementing EDI, many factors must be considered, including: the Federal Information Processing Standards (FIPS), the X12 Standards process, the migration of X12 to EDIFACT, and the role of a single set of Federal Implementation Conventions (ICs).

5.2 Implementation Conventions

EDI Syntax standards, both X12 and EDIFACT, are intended to accommodate a full range of business activities for all industries. They are developed by consensus among a large number of users, each with his/her own set of needs. The resulting standard is very broad and is intended to meet the diverse requirements of all users. The DISA Center for Standards provides the management structure and mechanisms necessary to coordinate functional and technical efforts to tailor existing standards into documented DOD Implementation Conventions for use within a particular operational environment. Business functionality is the preeminent requirement of EDI IT Standards and functional (business area) participation in the standards process is required for the successful application of DOD EC and EDI standards. The PSAs may sponsor functional participation through PSA working groups that cooperate with the DISA Center for Standards in the standards process.

5.3 Federal Information Processing Standard (FIPS) 161-2 (Draft).

DOD EDI Standards will be adopted in accordance with those adopted by the Federal Government via FIPS PUB 161-2 (Draft). FIPS PUB 161-2 does not mandate the implementation of EDI systems within the Federal Government; it requires the adoption of two families of information syntax standards. The two syntax standards are the X12 for domestic information exchanges and United Nations Electronic Data Interchange For Administration, Commerce and Transport (EDIFACT) for international information exchanges.

5.4 ANSI Accredited Standards Committee X12

Although a number of industry specific syntax standards for the electronic exchange of business information exist, X12, accredited by ANSI, is generally recognized as the North American EDI standard and is well supported in a number of Pacific Rim nations. Most industry specific standards have committed to aligning themselves with X12. Federal Agencies which were using industry specific standards on 30 September 1991 may continue to do so for five years from that date. Industry specific standards may be used beyond five years only if no equivalent X12 (or EDIFACT) standard is approved by 30 September 1996. X12 consists of a number of underlying standards and addresses a wide range of business requirements. Since most EDI information exchanges are domestic and X12 is more mature than EDIFACT, X12 is the primary EDI syntax for the DOD. Management of X12 is accomplished through a number of functionally oriented sub-committees. A close working relationship between individual DOD members and these sub-committees has evolved and it is in the DOD's best interest to maintain these relationships. DOD participation in X12 sub-committees generally comes from a wide range of functional users.

ASC has voted to approve a plan for the technical migration to and administrative alignment with UN/EDIFACT. New efforts are underway to merge the X12 standards into those of EDIFACT. The two standards must coexist in the DOD during this transition. The DOD, through X12, is participating in the development of EDIFACT message which will be required to trade with international partners.

6.0 GCSS

The Global Combat Support System (GCSS) initiative deals with providing a common infrastructure for co-existence and interoperation of automated information systems, or functional applications, providing combat support. This environment is also to be interoperable with the Global Command and Control System (GCCS). The functional applications are being developed by various central design activities belonging to the Services and Agencies, on behalf of the Principal Staff Assistants having oversight of each functional area. The primary work of GCSS therefore consists of preparing common components of the infrastructure and helping the central design activities interface the functional applications to that

infrastructure.

The first of the five GCSS product areas, Functional Applications, deals with defining what is required to interface an application to GCSS and with any modification(s) required to the application itself. Modifications to applications that are necessary to operate on a common infrastructure, to include common services, shared data, communications, and common hardware platforms fall under this product area. The degree of modifications required will vary by application and will be defined and scheduled to match the functional requirements for fielding the applications.

The other four product areas deal with providing for or modifying the common infrastructure so the functional application can operate with it. The EC/EDI product area provides common services and infrastructure for this service area so that each functional area does not have to repeatedly develop and pay for these capabilities. As long as each application provides data in a commonly defined fashion, it is assured logical as well as physical interface with other Government applications and with EC/EDI trading partners in Industry. The Common Operating Environment (COE) product area is an area that complements modifications done to the application. While the application may be modified to run on the COE, it is possible the COE may lack some services required by multiple applications. Modifications on the application will be done under the Functional Applications product area while modifications to the COE would be done under the COE product area.

Similarly, the shared data environment product area will provide the services and infrastructure necessary to facilitate and achieve shared data for each functional application. Any modifications needed for the application are done under the Functional Applications product area, but as more applications are integrated into GCSS, it is expected that modification and expansion of the underlying shared data environment will be necessary. Finally, EC/EDI, COE and a Shared Data Environment all need a communications and hardware infrastructure which will be provided by the Communications and Computing Shared Infrastructure product area. This will provide an integration and testing facility for GCSS, communications upgrades to support GCSS traffic, and fund common hardware and software infrastructure necessary to facilitate the fielding of GCSS. Several methods will be used for this latter area.

Table of Contents

DISA D7 Home Page

DISA Home Page

APPENDIX X -ISSUES / ACTIONS
(POC DISA - D7)

This appendix documents the issues that have been identified during development of this strategy and recommends the action(s) that should be taken to resolve the issues. The issues are presented in table format on the following pages.

The following table is a list of issues or requirements and one or more related actions to be taken. The meaning of each table column is:
Org The organization about which the issue is concerned.
Issue The issue, stated as a problem or as a requirement.
Action A specific and measurable action designed to resolve the issue.
Action Org The organization(s) responsible for the action.
Compl Date The expected completion date for the action.
Action Type (P)olicy, (O)perations, (OBE) Overcome By Events, or **something else**
Time Frame Near, Mid, or Long Term **do we need this now - with date?**

Org	Issue	Action	Action Org
DFAS	1. DFAS HQ has agreed to implement EDI for unmatched disbursements using the DOD EC and EDI Infrastructure.	1.a Monitor progress of the implementation.	
	2. DISA must ensure the ECPN architecture is prepared to handle government-to-government exchange of transactions, and is able to replicate and correctly address one transaction to multiple locations. Until the ECPN is deployed, the current DISA gateways must accommodate DFAS' requirements.	2.a Develop routing tables to accommodate the requirement of one transaction to multiple locations.	
	3. There is a requirement for government-to-government exchange of EDI 850s (contracts) and 860s (contract modifications) in X12 version 3050 for major weapon system procurement. The requirements must be collected with enough lead time to complete DOD EC and EDI Infrastructure enhancements well before DFAS milestones.	3.a Develop the functional requirements for 850s and 860s.	DISA D7 DFAS

	4. There is a requirement to develop functional requirements for the capability to send single transactions to multiple locations. The requirements must be collected with enough lead time to complete DOD EC and EDI Infrastructure enhancements well before DFAS milestones.	4.a Develop the functional requirements for one to many transaction distribution.	DISA D7 DFAS
	5. There is a requirement to develop functional requirements for the capability to pay the vendor and send the X12 820 Remittance Advice to the Department of the Treasury. The requirements must be collected with enough lead time to complete DOD EC and EDI Infrastructure enhancements well before DFAS milestones.	5.a Develop the functional requirements for vendor pay and Remittance Advice.	DISA D7 DFAS
USTRANSCOM	6. There is a need for an analysis of DISN connections for all Defense transportation activities, and to provide ways to connect to DISN if activities are not connected.	6.a Perform an analysis of DISN connections.	DISA USTRANSCOM
		6.b Provide DISN connections for activities that need it.	DISA USTRANSCOM
	7. There is a need to conduct a transportation-specific ECPN performance/throughput/speed of service test and to develop requirements to begin the transition of EDI traffic from its commercial VAN connections to the Infrastructure's VAN connections.	7.a Conduct ECPN performance tests.	DISA USTRANSCOM
		7.b Develop requirements for transition to infrastructure VAN connections	DISA USTRANSC
	8. There is a need to gather transportation industry encryption and non-repudiation security requirements and to incorporate Global Transportation Network (GTN) services and support into the GCSS.	8.a Gather security requirements	DISA GCSS PMO USTRANSCOM

		8.b Incorporate GTN services and support into the GCSS.	DISA GCSS PMO USTRANSCOM
	9. There is a need to incorporate transportation industry-specific data requirements into the Federal X12 ICs	9.a Update the Federal X12 ICs transportation requirements.	USTRANSCOM DI Center for Standards
Medical Logistics	10. There is a need for Medical Logistics to begin using the DOD EC and EDI Infrastructure.	10.a Collect Medical Logistics functional requirements.	DISA Medical Logistics
		10.b Perform testing of performance/throughput/speed of service.	DISA Medical Logistics
		10.c Develop Medical Logistics EDI deployment plan.	
		10.d Medical Logistics begin sending EDI traffic to the Infrastructure	DISA Medical Logistics
	11. There is a need to incorporate Medical Logistics specific data requirements into the Federal X12 ICs	11.a Update the Federal X12 IC Medical Logistics requirements.	Medical Logistics D Center for Standards
DLA	12. There is a need for DLA to begin using the DOD EC and EDI Infrastructure.	12.a Collect DLA functional requirements.	DISA DLA
		12.b Perform testing of performance/throughput/speed of service.	DISA DLA
		12.c Develop DLA EDI deployment plan.	DISA DLA
		12.d Identify and certify VANs that DLA needs to use in the EDI infrastructure.	DISA
		12.e DLA begin sending EDI traffic to the Infrastructure	DISA DLA
	13. There is a need to incorporate DLA specific data requirements into the Federal X12 ICs	13.a Update the Federal X12 IC DLA requirements.	DLA DISA Center for Standards
	14. There is a need to transition DLA trading partner direct connections to the EC and EDI Infrastructure.	14.a Analyze DAASC value added services and functionality to determine how they can be added to the DOD EC and EDI Infrastructure.	DISA

	15. There is a need for DLA to use X12 version 3050 transactions in the EDI Infrastructure.	15.a Analyze methods to transition DLA translation sites to the ECPN gateways.	DISA
		15.b Prepare the DOD EC and EDI Infrastructure for DLA conversion to X12 version 3050.	DISA
ECA PMO	16. There is a need to write a Federal-wide EC and EDI strategic plan, help agencies present a unified requirement to ensure solutions are not stove-piped and that the solutions adhere to the Federal EC and EDI strategic plan. The ECA PMO needs to provide technical and functional POCs for each agency to coordinate all agency EDI implementations.	16.a Write a Federal-wide EC and EDI strategic plan.	DISA D7 can assist ECA PMO
		16.b Assist agencies to present a unified requirement that adheres to the Federal EC and EDI strategic plan.	DISA
		16.c Provide a technical and functional POC for each agency to coordinate all agency EDI implementations	ECA PMO
	17. There is a need to establish requirements for NEP access to the central Federal database, incorporate Federal NEPs into the DOD EC and EDI Infrastructure, and implement cross-functional EDI projects.	17.a Establish requirements for NEP access to the central Federal database	DISA D7 ECA PMO
		17.b Incorporate Federal NEPs into the DOD EC and EDI Infrastructure	DISA D7 ECA PMO
		17.c Implement cross-functional EDI projects.	DISA D7 ECA PMO
	18. There is a need to enhance ECPN functionality to meet requirements identified to DISA D7 and implement standard solutions in accordance with the ECA PMO strategic plans.	18.a Enhance ECPN functionality to meet requirements	DISA
		18.b Implement standard solutions in accordance with its strategic plans.	ECA PMO

	There is a need to transition stovepiped EDI solutions to the standard solution.	19.a Identify stovepiped EDI solutions that need to be moved to the new infrastructure.	DISA ECA PMO
		19.b Develop and execute a plan for the transitions.	DISA ECA PMO
DISA	Central Contractor Registration	3/15-01: Corinne Engle will update the matrix to include the August 94 requirements as a requirements source and update any issues and actions as a result of this meeting.	
		3/15-02: D6/EDS will provide Char Ivey an impact analysis (cost and schedule impacts) on processing multiple PLA loops in one 838 per day to D&B, and include the CCR ID and password in the request.	
		3/15-03: Judy Monje/D&B will provide an analysis/proposal from D&B of what turn-around time can be expected under the current way CCR is doing business, i.e., one TP for each 838.	
		3/15-04: A meeting with CCR and CTF needs to be held to define/refine the boundaries of responsibilities between CCR and CTF, including who will be responsible for notifying the TP of his confirmation.	
		3/15-05: An MOA should establish and MOA with CTF that specifies the criteria for turn around times for CTF validation. This should include the terms for both before and after automation.	
		3/15-06: D6/EDS will develop a proposal on how to send the notification of CTF validation.	
		3/15-07: D6/DUSD(AR/EC) to get a "strawman" Errata 3/IC3060 to CCR workgroup so functional community can have input.	

		3/15-08: D3/D6/Gateway Administrators should establish a process to communicate with the gateway administrators.	
		3/15-09: The functional user of the data (DLSC?) should prepare instructions for the gateway administrator and AISs on how to use the data.	
		3/15-10: Mike Smith to provide Charlene Ivey 2 cost estimates: 1) the spend plan and requirement for additional funds to continue the support to the PC program beyond the 90 day time frame; and 2) a cost estimate for the development, redistribution and documentation for Errata 2 of the PC program.	
		3/15-11: DISA (D6 & D7) to provide to Charlene Ivey the status of SOW deliverables, the dollars expended to date on each CCR SOW and the plan of action to continue CCR development and funding.	
		3/15-12: D6/EDS to provide Charlene Ivey a cost and schedule estimate for the development of an on-line environment to support 50 concurrent users. It was later agreed that this estimate would include alternative technologies such as using the World Wide Web. This proposal will also include the proposed screen designs.	
		3/15-13: Charlene Ivey to provide Mike Smith with guidance on proceeding with the PC Program.	
		3/15-14: CTF (Lib Curtis) to test the PC program for Errata 2 when it becomes available from Mike Smith.	

		3/15-15: EDS/D6 will provide handouts of the on-line registration screens to Mike Smith so he can get them to the CCR AWG members prior to the next meeting. These should be emailed to Mike Smith by 20 March.	
		3/15-16: Deborah Germak will provide electronic copies of the PC software screens to all members of the CCR AWG via email.	
		3/15-17: D6/EDS to provide Charlene Ivey a cost and schedule estimate for developing the SIC requirement.	
		3/15-18: Judy Monje to provide 3 copies of the SIC+2 diskette to DISA-D6 (Mike Riha).	
		3/15-19: Mike Riha and Deborah Germak will jointly develop a SOW for follow-on CCR development and present it to Charlene Ivey.	
		3/15-20: D6 will develop technical alternatives to invalid DUNS that are validated by D&B and present them to Char Ivey for a decision.	
		3/15-21: D6/EDS/Charlene Ivey will sit down and discuss D6's proposed predefined queries that are based on FOIA data. The proposal will be part of the 29 March proposal from D6.	
		3/15-22: Jim Gordy will consolidate the results of the Dec 5-6 and 20 CCR splinter group technical requirements and the geographic query requirements and the results of any other previous meetings, and any required DISA input into answers for the 5 page questionnaire.	

		3/15-23: DUSD(AR/EC) will raise the issue of data access and usage to Mr. Kelman's task force.	
		3/15-24: D6/EDS to propose a solution that includes the DUNS and a password to verify a TP's access/modification request on his CCR profile. This proposal shall also include any request for support to process the mailingof passwords to TPs.	
		3/15-25: Charlene Ivey will propose words for the VLA that VANs must release the TPINs to the TPs and that the TPIN is the property of the TP. Also note that confidentiality of the TPIN must be assured.	
		3/15-26: Charlene Ivey will set up a meeting between the DUSD(AR/EC) office and the federal ECA PMO to discuss details about federal organizations registering in CCR and the D6/EDS proposal for subphase 2.	
		3/15-27: LESCO will send EDS a government registration for testing.	
		3/15-28: The D6/EDS proposal will include short range COOP/BEP solutions.	
		3/15-29: D7 will research the 21st century date codes in CCR for clarification of the problem.	
		3/15-30: DUSD(AR/EC) will get authorization for the Navy to modify AISs for joint TP profile downloading capabilities for reporting purposes.	
Army		**1) Action Item:** Research waiver to FAR clauses that impact FACNET.	ODUSD(AR/EC)
		2) Action Item: Provide Lt Col Walsh with an electronic copy of the ECIC Strategy Plan.	ODUSD(AR/EC)

		3) Action Item:. Follow-up on the Bell Atlantic D.O. implementation	ODUSD(AR/EC)/D
		4) Action Item: Follow-up on equipment storage that is being used in Bosnia effort.	ODUSD(AR/EC)
		5) Action Item: Provide follow-up information on CCR effort.	D2/D7
Navy		**6) Action Item:** Provide Navy the information promised at the DISA 12/95 functional users meeting.	D2/D7
		7) Action Item: Conduct conference call to understand the services requirement on ECPN implementation issues and the impact to the 3050 and 2003.	D7
		8) Action Item: Manually scanning of error files to find transactions is a problem. Explore the possibility of automating a red flag" of error files.	D3
		9) Action Item: Communicate an understanding of ECPN to the services (customers) or continuous customer education.	DISA
		10) Action Item: CCR Interface operations manual will DISA prepare this? If so, then the Navy wishes to be involved in this process.	DISA
		11) Action Item: Can the trading partner profile information be downloaded from the CCR in the ECPN environment in the future and in the present architecture?	DISA
		12) Action Item: What is level of testing is currently being tested on the VANs and VAS (end to end testing)?	DISA
		13) Action Item: Provide the Mr Nielsen a copy of the software system used to sort Trouble Tickets?(DISA)	D3

		14) Action Item: Is there a way for a customer to check the status of Trouble Tickets?	D3
		15) Action Item: DISA and Navy put together a implementation plan for Kings Bay, GA. Navy provide DISA their definition for flawless implementation.	NAVY AND DISA
		16) Action Item: Establish policy issue on the VANs don't keep the original RFQ record and don't know what transactions sets have been sent or to whom received them. This issue is regarding amendments to solicitations and whether they should be canceled and a new solicitation issued each time there is a change to the solicitation since many VANs/VASs do not offer the service of tracking RFQ numbers. Provide regular updates to Navy and components. This is important to the AIS users.	ODUSD(AR/EC)
		17) Action Item: How can we educate vendors on which convention to learn (3050 or 2003)? DISA Provide guidance.	DISA
		18) Action Item: Provide procedures or software that will enable the Navy ECIC representatives to DECODE DISA word processing attachments from their E-mail.	DISA
		19) Action Item: Will DISA or the services test requirements on 3050 with trading partners?	DISA
		20) Action Item: Is the ECPN dates given (February 15, 1996) still valid?	DISA
		21) Action Item: DISA set-up teleconference with customers on the 3050 and 2003 testing.	DISA
		22) Action Item: Navy wants more information on the query capability that the ECPN implementation can provide.	DISA

		23) Action Item: Establish policy issues on VANs unilaterally removing clauses that pertain to an RFQ.	ODUSD(AR/EC)
		24) Action Item: Trading Partner Profile functionality currently at the Gateway part of ECPN functionality?	DISA
		25) Action Item Navy requested information about the 838 status, including ERRATA 2.	DISA
Air Force		1. Arrange for a separate meeting with AF to discuss and resolve transition of the Wright Patterson AFB workload onto the ECPN without AF Gateway support or decide that AF must add an additional Gateway to support the volume of workload.	DISA
		2. Provide follow-up information on CCR effort.	DISA
		3. Arrange a separate meeting with component representatives on CCR status.	ODUSD(AR/EC)

Table of Contents

DISA D7 Home Page

DISA Home Page

APPENDIX Y -REFERENCES
(POC DISA - D7)

This appendix lists various documents, working groups and action teams that are or have been involved in the Federal government's efforts to identify and resolve problems through the implementation of Electronic Commerce. Each item contains a synopsis of the effort and information about how to gain access to it. Readers of this document are encouraged to contribute to this compendium by sending inputs to Mr. Jim Mulder at the address given in the forward to this document.

ITEM/ SYNOPSIS LOCATION
DOD Electronic Commerce (EC) Requirements, Systems, and Implementation Strategy **www.disa.mil/D7/onlnpubs/strategy/index.html** Establishes a common DOD EC vision by defining requirements, roles and responsibilities, and strategies for achieving a unified approach to EC implementation and operation. In addition, it serves to document the current and future capabilities of the Defense Information Systems Agency (DISA) to support the increasing EC workload through the Defense Information Infrastructure (DII). It is an evolving document that is intended to be updated periodically to identify changes in requirements and the strategies that need to be tailored to fulfill those requirements.
DODINST 8000.XX (Draft) ***Electronic Data Interchange (EDI) in Support of Business Related Electronic Commerce (EC)*** **Not available until finalized** Serves as high level guidance on EC from the Under Secretary of Defense (Acquisition & Technology) USD(A&T) and the Assistant Secretary of Defense (Command, Control, Communications & Intelligence) ASD(C3I). Establishes policy and assigns responsibilities for the implementation, execution, and oversight for the DOD's utilization of EDI in support of EC.
Draft ***Defense Transportation Electronic Data Interchange Implementation Plan*****, November 1995** **Not available until finalized** Prescribes an aggressive plan to accelerate the pace of EDI implementation in support of transportation. It is aimed at focusing energy, attention and resources toward expanding EDI uses in support of DOD transportation business information exchanges. It identifies basic requirements for the use of EDI in support of DOD transportation in addition to detailing the current EDI initiatives.
Electronic Commerce in Contracting (ECIC) Process Action Team (PAT) Report **Internet World Wide Web (http://www.acq.osd.mil/ec/lookup.html** Describes the results of a bottom-up review of existing and ongoing implementations of EDI technologies in Defense procurement systems. Resulted in an implementation plan for ECIC.
Federal Acquisition Streamlining Act of 1994 **SBA On-line BBS 1-800-697-4636 as "Small Business Guide to Procurement Streamlining: Reinventing how the Government does Business" (REFORM.TXT) in file area 14, or Internet World Wide Web (http://www.sbaonline.sba.gov** Designed to simplify and streamline the Federal procurement process, it repeals more than 225 provisions of the law to reduce paperwork, simplify procedures, facilitate commercial product acquisitions, promote electronic commerce, and improve the efficiency of procurement laws.
Your Introduction to Electronic Commerce - A Handbook for Business **Electronic Commerce Information Center 1-800-EDI-3414 or Internet World Wide Web (http://www.acq.osd.mil/ec/subjects.html)** Describes to businesses trading with the Federal government various features and procedures pertaining to Electronic Commerce as conducted by the government. Includes a primer on Electronic Data interchange (EDI), communications, contractor registration, standards, and hardware and software requirements.

Federal Electronic Commerce Acquisition Instructions (FECAI)
SBA On-line BBS 1-800-697-4636, or Internet World Wide Web (http://www.acq.osd.mil/ec/ecic_hpg.html
These instructions explain how contractors register with the Federal government. They describe the creation of a single master registration database to avoid repetitive registrations with each procurement office. It also covers standards, value added service providers, electronic payments and financial institutions, and other topics related to doing electronic commerce with the Federal government.

Federal Implementation Convention Guidelines
1-800-334-3414
Electronic Commerce/Electronic Data Interchange is conducted using national or international standards. As a matter of common practice, standards are seldom used in their entirety. An Implementation Convention is a subset of a standard that conforms to the standard, but only implements that portion of the standard that is applicable to the using organization. The Federal Implementation Convention Guidelines are based on the American National Standards Institute (ANSI) Accredited Standards Committee (ASC) X12.

Defense Management Reports Decision (DMRD) 941, 1990
Unknown
Stated that the strategic goal of DOD's current efforts is to provide the department with the capability to initiate, conduct, and maintain its external business related transactions and internal logistics, contracting, and financial activities without requiring the use of hard copy media.

Defense Information Infrastructure (DII) Master Plan
(703) 607-6342 (DSN 327-), POC 1Lt Vincent Williams
The DII Master Plan reflects DOD Components' collective strategy for providing the Warfighter with information capabilities to achieve mission success. The key purposes of the DII Mater plan are to: establish the common DOD vision of the DII to ensure unity of efforts in its achievement; identify current and future elements of the DII; define roles, responsibilities and relationships for all of DOD's DII participants; identify the relationships and interdependencies of current DII initiatives; and assist in planning and implementing of DII efforts across DOD.

Defense Information Systems Agency Home Page
Internet World Wide Web (http://www.itsi.disa.mil/
This home page contains a variety of information including a listing of compliance tested software packages (/ct/soft/html) and a listing of compliance tested VASs (/ct/vas.html).

Table of Contents

DISA D7 Home Page

DISA Home Page

APPENDIX Z - GLOSSARY

TERM	DEFINITION
AIS	Automated Information System
ANSI	American National Standards Institute
ARCC	Acquisition Reform Communications Center
AR/EC	Acquisition Reform/Electronic Commerce
ASC	Accredited Standards Committee
ASD(C3I)	Assistant Secretary of Defense (C3I)
C2	Command and Control
C3I	Command, Control, Communications and Intelligence
CCR	Central Contractor Registration
CDA	Central Design Activity
CFS	Center For Standards
CFSE	Center for Systems Engineering
CISS	Center for Information Systems Security
COE	Common Operating Environment
COOP	Continuity of Operations
COTS	Commercial-Off-The-Shelf
CSC	Customer Service Center
CTF	Compliance Test Facility
DBOF	Defense Business Operations Fund
DCTF	DISA COOP and Test Facility
DFAS	Defense Finance and Accounting Service
DII	Defense Information Infrastructure
DISA	Defense Information Systems Agency
DISN	Defense Information Systems Network
DLA	Defense Logistics Agency
DMC	Defense MegaCenter
DMLSS	Defense Medical Logistics Standard Support
DMS	Defense Message System
DOD	Department of Defense
DPCSC	Defense Procurement Corporate Information Management Systems Center
DUSD(AR/EC)	Director for Electronic Commerce
DUSD(AR)	Deputy Under Secretary of Defense (Acquisition Reform)
EC	Electronic Commerce
ECIC	Electronic Commerce Information Center
ECIC	Electronic Commerce in Contracting

ECPN	Electronic Commerce Processing Node
EDI	Electronic Data Interchange
EDIFACT	EDI for Administration, Commerce and Transport
EDISMC	EDI Standards Management Committee
EFT	Electronic Funds Transfer
FACNET	Federal Acquisition Network
FECAI	Federal Electronic Commerce Acquisition Instructions
FRD	Functional Requirements Document
FTP	File Transfer Protocol
GCCS	Global Command and Control System
GCSS	Global Combat Support System
GOTS	Government-Off-The-Shelf
GW	Gateway
IC	Implementation Convention
IOC	Initial Operational Capability
IPT	Integrated Process Team
IT	Information Technology
JIEO	Joint Interoperability Engineering Office
JITC	Joint Interoperability Test Command
JLSC	Joint Logistics Support Center
MHSS	Military Health Services System
MILS	Military Standard
MLFPIP	Medical Logistical Process Improvement Program
NEP	Network Entry Point
NIPRNET	Non-classified Internet Protocol Router Network
OSF	Operational Support Facility
PAT	Process Action Team
PSA	Principal Staff Assistant
SMC	Standards Management Committee
SPS	Standard Procurement System
TDCC	Transportation Data Coordinating Committee
TP	Trading Partner
URL	Uniform Resource Locater
USD(A&T)	Under Secretary of Defense (Acquisition & Technology)
USTCJ4-LT	US TRANSCOM J4-LT
VAN	Value Added Network
WWW	World Wide Web

Table of Contents

DISA D7 Home Page

DISA Home Page