ANNEX F (ENGINEERING & CONSTRUCTION SERVICES) to LOGCAP CONTINGENCY SUPPORT PLAN

REFERENCES. See ANNEX N, Appendix 4.

TIME ZONE USED THROUGHOUT THE PLAN. Iraq.

TASK ORGANIZATION. See ANNEX A.

1. SITUATION. See Base PLAN.

a. Assumptions:

1) Field work will have authorization and approval from all local agencies having jurisdiction. There will be no hindrances or delays associated with customs clearance, work permits.

2) Information management system set-ups, satellite dishes, handheld radios, mobile phones, CMT personnel, TCN visa applications, material deliveries, heavy equipment permits, local manpower availability, and any other activity that directly affects the ability to proceed has been mitigated.

3) There is no effective, systematic effort to destroy long lengths of major pipelines. It is assumed that the any sabotage will be directed to discrete locations connecting with pipelines such as manifolds, Gas Oil Separation Plants (GOSPs), terminals and pump stations and, of course, the wellheads. Reaction plans address these possibilities. Plans also address the need to repair or replace sections of pipeline perhaps hundreds of feet long in hundreds of locations and of varying pipe sizes. However, the plans do not address the need to replace hundreds of miles of critical long distance pipelines such as the Iraq-Turkey Pipeline (210 miles of 40-inch and 210 miles of 46-inch in Iraq), the Iraq-Saudi Arabia Pipeline (206 miles of 48-inch pipe in Iraq), and the pipelines feeding the Mina al Bakr terminal in the Persian Gulf (143 miles of 48-inch pipe onshore and offshore). Completely replacing one or more of these pipelines would likely be a two-year effort and could run into the billions of dollars. It has been assumed that complete replacement of these pipelines will not be necessary.

4) The exact condition of facilities inside Iraq and the resources required to reestablish production levels are not known; therefore, an assessment by teams of experts from construction, procurement, HSE and engineering departments will be required.

5) BRS will receive necessary power at battery limits of each oil production/shipping facility from others.

6) National infrastructure concerning transportation highways, railways, water, water treatment, airports, and commercial sea ports will be assessed and remediated to the required mission operable levels by others. BRS scope for roads, rail and export terminals is limited to inside battery limits of oil producing facilities.

7) Based on the military situation and infrastructure deterioration since the end of the Gulf War, it is expected that portions of the Iraqi national infrastructure required to support the mission will need repairs.

2. MISSION. See Base PLAN.

Declassified by OUSD Policy on 8 May 08

3. EXECUTION. See Base PLAN.

a. Concept of Operations.

This CSP is narrated from a 'worst case' point of view, assuming maximum damage that disables the oil infrastructure. The worse case solution is cosntruction-heavy and all of the BRS management systems would be used to effect the restoration. The most probable case would require a smaller level of effort with regard to the reporting systems.

The overall approach for Construction & Engineering Services (known as the Project Execution Plan in the oil services industry) is outlined in this Contingency Support Plan (CSP). The BRS project organization includes a PMT, comprised of specialized teams to address specific elements of the Iraqi oil infrastructure. The organizational approach is a combination of a dedicated task force - located in Houston - to perform engineering, procurement, construction, commissioning and operating services with teams - located in country - assessing the status of the Iraqi oil infrastructure, constructing the repairs or replacement of the facilities and initiating their operation. Production and distribution activities will involve existing Iraqi personnel and organizations whenever possible, subject to and consistent with guidance from appropriate authorities.

Responsibilities for management of the project team will be the responsibility of the project manager with assistance from the deputy project managers, and other team leadership. The direct reports of the project manager will comprise the PMT organization and include the managers for the following functions as well as the Deputy Project Managers.

- Deputy Project Manager – Operations
- Deputy Project Manager – Engineering
- Deputy Project Manager – Construction
- Deputy Project Manager-Logistics
- Health, Safety, and Environment (HSE)
- Quality Assurance/Quality Control (QA/QC)
- Business Management
- Contract Administration
- Procurement, Materials, Management, and property
- Facilities Operations/Maintenance

1) During the Assessment / Initial Restoration of the Oil Infrastructure phase, the PMT and the respective team members will receive the assessment reports from the teams in country which will serve as the basis to define the work to be done. Once the definition is complete then the team will design the facilities and procure and deliver the equipment and materials to the specific construction site(s). In addition to providing oversight and ensuring all project requirements are met, the PMT organization will provide support and direct input to the unit teams in Houston in areas such as HSE, constructability, project controls, document control, QA/QC, operations/maintenance, procurement, etc. As the definition work progresses and work load merits the assignment, personnel in these areas will be assigned full time to the unit teams in Iraq.

2) The PMT and project team will be located with representatives from the customer agencies in a common location on a floor dedicated for the work in BRS' Houston facilities. The customer team will be located in close proximity to corresponding BRS personnel undertaking the same scope of work.

As the work progresses, the customer will be expected to actively participate as part of the BRS engineering management team to help ensure that all the customer's requirements are met by the project team.

3) The Deputy Project Manager, Engineering, will have supervise the unit execution teams, the interface manager, and the project engineers for each unit execution team.

   The unit teams will be assembled by specific activities (wellheads, flow lines/pumping stations, GOSPs and stabilization plants, crude storage, and crude export facilities) utilizing the BRS "work cell" process that has historically provided exceptional results. The deployment/location of the work cell process is best described as a dedicated task force. A work cell is a multi-discipline team assembled to produce specific deliverables for a unit using an interactive work process that reduces engineering cost and schedule. An extended work cell includes those team members outside the physical work cell who are working toward the same goals and producing the same deliverables. The work cell will also include customer team members as appropriate.

   Each unit team will include a project engineer, and engineering specialists as required to execute the specific work. Discipline engineers will be assigned to each unit by the discipline work group leads within the deputy project engineering manager's organization. The discipline work group leads will provide engineering consistency across the units and the most effective use of resources. At appropriate times, the unit team will include a construction specialist to ensure constructability is considered in design.

   The concept of a work cell does not just involve locating participants in the same physical location; it also encourages members to focus on the final work cell product and not just on their assigned tasks. Performance, cost and schedule, of the work cell are monitored as a team and not by discipline. This enhances inter-discipline communication and cooperation.

   A work cell is also very flexible and its function, make-up, or even its existence will be adjusted as the project evolves and deliverable requirements are reset. As the tasks are completed, the work cell will be eliminated and its members deployed to other work cells.

   Another advantage of the BRS approach is that it maximizes the ability of the overall integrated project team to develop and share resources throughout the various project areas as the project develops. This not only provides more consistency, but also reduces the time it takes to educate new project team members, thus improving productivity.

   To assist in alignment and achieving project objectives, BRS will include customer members as active participants in the work cells.

4) An execution plan will be developed for each unit including a plan, schedule, and budget with the resources identified to do the work. See Appendix 1 (Project Controls) to this Annex. The execution plans will be developed for each unit (element) based on:

   a) Indentifying critical issues early on, including procurement sources and the acquisition of materials and equipment to support the work.

   b) Construction-driven execution with the optimum use of pre-assembly and supplier packages to maximize construction efficiency.

   c) Applying constructability, operability, and safety input from the start of work.

b. Project Controls:

BRS provides project management and the Client an integrated, schedule and cost performance measurement system. BRS will use Earned Value Management System (EVMS) methodologies to provide visibility into current performance, provide a sound foundation from which to statistically or discretely estimate the cost of remaining work and corresponding schedule, provide an early recognition of cost and schedule deviations, either positive or negative, and monitor the corrective action plan process.

The nature of work within this CSP is significantly more complex than a traditional LOGCAP event. This degree of complexity requires additional software tools and processes to provide visibility into cost and schedule performance. Although not previously used on a LOGCAP event, these tools and processes are standard to the KBR Engineering, Procurement and Construction (EPC) product line for the oil industry.

c. Engineering.

BRS is prepared to mobilize equipment, personnel, and related services following an act that damages the well's production equipment and to restore the fields back to a target level of production . BRS will cap wells, mitigate environmental impact, and restore oil production target levels as required by the Statement of Work (SOW) within the shortest time period possible. Our engineering approach is outlined below and described in detail in the Tabs to this Annex.

1) **Tab A (Organization Charts).**

2) **Tab B (Assessment Teams).**

The assessment teams will evaluate design, engineering, HSE, procurement, well control, well production capabilities and construction analysis. The assessment team, with the assistance of an interpreter and local subcontractors, will gather professional observations and data and send it to the BRS Home Office in Houston for recommendations to and refinement of the plan. Select members of the assessment team will remain in country after the assessment period to continue the recovery process and oversee the site preparation.

3) **Tab C (Wellheads & Reservoirs).**

BRS will develop a program to bring under control and cap wells in an accelerated period of time following the Notice to Proceed (NTP).

Following damage to a well's production equipment, the engineering assessment team will mobilize to the site and conduct a damage assessment. The team will assess the type and extent of damage to each well and determine the course of action and specific resources necessary to restore the wells. Their analysis will establish a rating of each well based on the type and extent of damage and will establish a priority sequence for well intervention work to restore oil production to the target level.

Our PMT will sequence well work in the effort to restore oil production to target levels. Wells with no wellhead damage can be immediately assessed for whether the well has the capability to flow with little or no repair. This is a key component that will help manage the actual work program and will involve mobilization of firefighting and capping teams.

wellhead equipment restoration, subsurface well intervention equipment and services including workovers, re-drills (if necessary), and environmental protection equipment and services.

Also key to success, is the timely establishment of water supplies and safe egress to all affected wells. Parallel assessments will be made (independent and separate from well fire fighting activities) of available raw water sources in the Southern fields area and in the Northern fields area.

4) **Tab D (Water Injection).**

BRS will deploy a team to assess the water supply and water injection systems.. The assessment will be for the purpose of prescribing the necessary remediation efforts to restore the water injection system to the design operational levels. The assessment and remediation of the injection wells are covered separately in Tab C (Wellheads). Three potential scenarios are considered for assessment and repair/replacement of the water supply and injection system. The remediation of the subject systems is critical to the enhanced oil recovery operations and a key component in achieving higher production levels from the fields.

5) **Tab E (Flowlines).**

A preliminary assessment of a flow line will be made by a visual inspection of the flowline from one end to the other to get a starting number and general idea of the amount of repair work needed. The damaged section(s) of flowlines will be removed and replaced. Small leaks will be temporarily repaired and stopped by installing a suitably designed clamp around the flow line.

6) **Tab F (GOSPs).**

(b)(3) 50 USC §403(g) Section 6 The initial "quick fix" may be able to only cover the South Rumailah Field which would provide a level of 1.0 million (MM) barrels per day (BPD) production of treated oil. North and South Rumailah are both needed in order to comfortably provide the 1.1 MM BPD goal. Combining all the fields in the south region, south of the canal and currently operating: North Rumailah, South Rumailah, Zubair and AL Luhay Fields can provide a level of 1.7 MM BPD production of treated oil. The northern Kirkuk field can provide a reliable extra 0.7 MM BPD production for the country up to the pre-hostility levels (estimated at 2.4 MM BPD). Combining all the currently operable northern fields, the total production capacity would reach 3.1 MM BPD.

Repair and refurbishment will be based on the nameplate rated capacity and a standardized design. The production capacity is based on the assumption that the crude oil wells are reused or restored as needed. See Tab F (GOSPs) to Appendix 2 to this Annex.

7) **Tab G (Gas Handling).**

The associated gas from the oil field GOSPs will be handled by the existing (repaired) and/or new gas gathering pipelines, compression stations, and gas processing plants. The processed gas will flow to the gas processing/treating plants. From these plants, the processed gas will flow to the existing gas pipeline (repaired) and gas distribution system for delivery to the end users. Fuel gas for operating gas turbines generators or existing gas

turbine driven pumps will be taken from the existing gas distribution system. If the existing gas system is not availible, fuel gas will be taken directly from the GOSP high pressure seperator on site and piped untreated to the gas turbines in the area.

The associated gas from the GOSP that can not be processed by the gas handling system will be flared at the GOSPs. It is expected that the GOSPs will be restored to capacity earlier than the gas handling system will be restored to its capacity, and during this time period flaring of the associated gas will take place at the GOSP.

8) **Tab H (Pipelines/Pumping Stations).**

Pipelines and pump stations are to be repaired or replaced to support the export objective. Transmission pipelines carry the fluids, crude oil in this case, from one plant to another. Plant in this context should be understood to mean GOSP, gathering station, stabilization plant, pump station, tank farm, terminal, or other facility. The common design and operating standard for this type of crude oil pipeline is ASME B31.4, Pipeline Transportation Systems for Liquid Hydrocarbons and Other Liquids. Pipelines in Iraq may have been designed to this or similar standards.

The scope of this Tab includes the crude oil pipelines within Iraq that have been identified as serving Iraq's crude oil export pipelines. It also includes the export pipelines to Saudi Arabia, Turkey, and Syria. Not included are the export pipelines serving the terminals in the Persian Gulf; those are discussed in Tab G (Gas Handling) to Appendix 2 to this Annex. Also not included in this Tab are crude oil pipelines serving Iraqi refineries, pipelines carrying refined products, natural gas pipelines except as noted below, and pipelines carrying non petroleum fluids such as water

9) **Tab I (Intermediate Terminals).**

The restoration scenario ranges from minor repair and refurbishment to major damage with complete "greenfield" replacement. The unknown design details, capacities, etc. of the existing in-place facilities are not available until after the initial EVENT has been assessed. The extent and degree of damage to expect is also unknown. Due to the level of unknowns, the restoration is not based on repair and reuse of the existing facilities.

10) **Tab J (Export).**

A siginificant amount of oil can be exported through two large deep water terminals located in the south of Iraq in the Persian Gulf. The two subject terminals are Mina Al Bakr and Khor Al Amaya and both have been in operation from 30 to 40 years respectively. Both terminals are at the end of their service lives and in need of extensive maintenace, repair, and in the case of Khor Al Amaya, completion of an extensive damage repair effort. Two berths at the Khor Almaya terminal are being repaired and will have a potential to load 500,000 to 700,000 BPD in the short term, and possibly 1,2000,000 BPD in the future. The Mina Al Bakr terminal under its current condition is limited to a loading rate of up to 1,800,000 BPD. The throughput could be potentially increased to 2,800,000 BPD based on the design capacity of the pipelines.

Three scenarios have been considered in restoring oil exports. The scenarios involve the use of the existing facilities in combination with the installation of two new SPMs. The exisitng facilities would be used to maintain exports while the SPMs are procured, installed, and

brought on line. The SPMs are considered to be an attractive solution to the replacement/refurbishment and maintenance/operations of the worn out marine terminals. The final solution will depend on the assessment findings of the existing faciltities, and the transportation pipelines to the terminals.

11) **Tab K (Regional Power Grids).**

BRS will receive necessary power at battery limits of each oil production/shipping facility from others.

If others are unable to deliver 50 Hz power to the battery limits of facilities restored by BRS, BRS offers an Alternative Action Plan described in Tab K.

12) **Tab L (Infrastructure).**

Infrastructure assessment will be included as part of the overall assessment of the oil producing facilities and will be limited to within the "battery limits" of these facilities. It is anticipated that the faciltites requiring infrastructure assessment will be the well sites, GOSPs, pumping stations, production storage/shipping terminals, and refineries.The objective of the assessment will be for the purpose of prescribing only the necessary remediation efforts to support the restoration of oil production to the target levels. The typical expected infrastrucutre within the facilities will consist of roads, electrical power, water utilities and water treatement. Information in Tab L deals mainly with the Civil infrastructure while restoration of electrical power is covered separately in the write-ups for each of the facilties.

13) **Tab M (Critical Materials).** A revised list of Critical Materials is provided. The list of and associated costs for Prepositioned Equipment is provided in Tab A to Appendix 3 to Annex R.

d. Procurement/Materials Management

Our Procurement, Materials, & Property Department consist of Subcontracts, Purchasing, Expediting, Traffic, Document Control, Material Control, Material Managers, Client-Owned Equipment Managers and Specialists.

Property & Materials:. BRS will execute this task in accordance with our Government approved Procurement & Property Systems to control, protect, preserve, and maintain contract Government property IAW the Government Property Clause 52.245-5, 52.245-2, FAR 45.5, and the terms of the Prime Contract. This system is a company wide procedure last approved 15 March 2002 by the DCMA Government Property Administrator in Houston.

Traffic: BRS will provide transportation services from worldwide locations to final destination utilizing safe economical and efficient methods of transport. Provide visibility of material in transit while meeting client and jobsite delivery requirements.

e. Construction

Construction specialists will be an integral part of the Advance Party and the Assessment Teams. The assessments and the engineering designs will determine the structure of the construction organization necessary to most effectively and efficiently repair or replace each of the crude oil infrastructure elements. The Advance Party, Assessment Teams and the construction organization

will initially be composed primarily of expatriates. As the construction organization matures, it will be supplemented by Host Country Nationals (HCNs). As segmentable portions of construction requirements become available, work will be awarded under subcontracts to Iraqi, regional, and international construction contractors with relevant capabilities. See Appendix 3 to this Annex.

f. Operations and Maintenance

Current information indicates that Iraqi oil infrastructure is in a state of disrepair. In order to restore the crude oil facilities to production capacity of 3.1 MM BPD, BRS will engineer, construct and repair facilities with priority to those facilities that will most quickly delivery schedules. At a minimum, BRS will restore existing facilities to a safe operating level. The feasibility of using existing production facilities will be considered based on feedback from the Assessment Teams. BRS will develop a comprehensive operations and maintenance plan to address not only those facilities that are inoperable or marginally operable, but also to improve the performance of operable facilities. Appendix 4 to this Annex details our strategy for pre-commissioning, commissioning, start-up, operations and maintenance for existing and new oil infrastructure facilities in Iraq.

g. Environmental.

The Advance Party will make the initial determination of the amount of environmental damage. This decision will be based on in-country information available and the analysis of the forward team and the Houston based support team. Depending on the amount of environmental damage, worst case being a repeat of Kuwait in February of 1991, only on a larger scale, the assessment teams will either be augmented by environmental specialists, or special environmental assessment teams will be formed. Each team will consist of or be augmented by a Petroleum Engineer, an Environmental Manager, and HAZMAT specialists as required. These individuals would be responsible for the determination of the level of environmental damage and the initial remediation efforts.

4. **MATERIAL AND SERVICES**. See Base PLAN.

5. **COMMAND AND SIGNAL**: See Base PLAN, ANNEX A, and ANNEX H.

ACKNOWLEDGE

(b)(6)
BRS PGM, LOGCAP

OFFICIAL:
(b)(6) BRS D/PGM

APPENDICES:

APPENDIX 1 Project Controls

APPENDIX 2 Engineering

- Tab A – Organization Chart
- Tab B - Assessment Teams
- Tab C – Wellheads & Reservoirs
- Tab D – Water Injection
- Tab E - Flowlines
- Tab F - GOSPs
- Tab G – Gas Handling
- Tab H - Pipelines/Pumping Stations
- Tab I - Intermediate Terminals
- Tab J - Export
- Tab K - Power Grid
- Tab L - Infrastructure
- Tab M - Critical Items List

APPENDIX 3 Construction

- Tab A - Management Organization Chart
- Tab B - Upper Management Organization Chart
- Tab C - North Facilities Stabilization Plant Organization Chart
- Tac D - South Facilities GOSP Organization Chart
- Tab E - South Facilities Wellheads Organization Chart

APPENDIX 4 - Operations & Maintenance

- Tab A – Long Term Operations & Maintenance Strategy

APPENDIX 5 - Environmental

APPENDIX 1 (PROJECT CONTROLS) to ANNEX F (ENGINEERING & CONSTRUCTION) to LOGCAP CONTINGENCY SUPPORT PLAN

REFERENCES. See ANNEX N, Appendix 4.

TIME ZONE USED THROUGHOUT THE PLAN. Iraq.

TASK ORGANIZATION. See ANNEX A.

1. SITUATION. See Base PLAN.

a. Assumptions.

1) Project Controls execution will take place in Houston for engineering and major procurements, and in country for construction, operations and maintenance and marketing.

2) In-country project execution will take place at multiple locations.

3) Cost and Schedule reporting from the multiple locations will be consolidated in the LOGCAP Houston Support Office and presented to the Client bi-weekly.

2. MISSION. See Base PLAN.

3. EXECUTION. See Base PLAN.

a. Concept of Operations.

1) BRS Project Controls provides project management and the Client an integrated scope, schedule and cost performance measurement system. BRS will use Earned Value Management System (EVMS) methodologies to provide visibility into current performance, provide a sound foundation from which to statistically or discretely estimate the cost of remaining work and corresponding schedule, provide an early recognition of cost and schedule variances, either positive or negative, and monitor the corrective action plan process.

2) The nature of work within this CSP is significantly more complex than a traditional LOGCAP event. This complexity requires additional software tools and processes to provide visibility into cost and schedule performance. These tools and processes are standard to the BRS Engineering, Procurement, and Construction (EPC) product line for the energy industry. **Table 1** illustrates the software/systems considered for use on the project for both home office and field controls:

Reports	Software/System
General	Microsoft Office Product
Schedule	Primavera (P3 for windows)
Engineering Progress	Work Hour Management System (WMS)
Materials Management	Inventory Control Systems
Procurement	Procurement Management Legacy Systems
Construction Progress	Automated Craft Ledger System (ACLS)
Cost Control	Project Cost Management System (PCMS)

Table 1. Sample Software/Systems

b. **Tasks.**

1) **Assessment Phase:** An estimator will be assigned to the initial assessment team. The estimators will work closely with the assessment team members from engineering, procurement and construction to develop a scope of work for each location. The assessment team will begin quantification of the scope of work and funnel information to BRS' central engineering group for long lead procurements requirements.

The Houston based Project Controls Manager and staff will begin configuring the cost system based on the Work Breakdown Structure (WBS). The Rough Order of Magnitude (ROM) estimate will form the basis for the first baseline budget and will be at a high level in the WBS hierarchy.

2) **Restoration Phase:** Project Controls Execution Plan development will begin in the assessment phase and finalized early in the Restoration Phase. This plan details the role, responsibilities and staffing of the controls group, in addition to the relationships and interfaces between all other components of the project execution and home office support teams. Key components of the plan are:

a) Staffing plan by month

b) Hardware and software requirements

c) System Implementation and Interfaces

d) Estimate Development

e) Planned Reporting Frequency

f) Work Breakdown Structure Development

g) Schedule Baseline

1) Look ahead schedules

2) CPM schedule

3) Plan for analyzing total float, etc.

h) Cost Control Updating Methods

1) Engineering work hour process and mechanics of entry to system

2) Purchase order and subcontract coding and commitment process

3) Accounting and labor interfaces

i) Change Management

j) Forecasting Methodologies for Engineering, Procurement, Construction and Indirects

k) Field supervision and indirects

When complete, the Project Controls Execution Plan becomes part of the overall Project Execution Plan.

3) **Key Elements of Control and Visibility:** The complex scope of work contemplated in the plan requires more detailed visibility into performance to manage both schedule and cost. The critical elements necessary to provide this visibility are a detailed WBS, a multi-level critical path schedule, maintenance of performance measurement baseline and a comprehensive change control process.

   a) **Well Defined Work Breakdown Structure:** The Project Controls Manager and team in conjunction with the engineering, procurement and construction management groups, will develop a WBS that defines the total project deliverables (scope of work) in a hierarchical structure. The WBS is the framework for integrating management subsystems and accumulating performance information. This provides the pathway to trace cost from the estimate to the final cost at a detail level. **Table 2** (next page) illustrates a typical EPC WBS.

   b) **Project Code of Accounts (PCOA) :** In Engineering, the PCOA is a four character field with the first two digits representing the engineering discipline, i.e. Piping, Civil, Electrical, etc., and two other digits are available to represent a work description. For purpose of Project Controls the cost system will use only the first two digits which define the discipline.

   The Construction PCOAs are used for the Construction work hour, labor, material and subcontract. The PCOA is a four digit field where the first digit represents the craft or commodity, the next two digits indicates the major category such as pipe spool erection and size of pipe and the final digit further defines the specific characteristics of the material. The cost system will use the first digit that represents the commodity and the construction tracking system will use the four digits. The four digit code identified above, P311, defines the account as pipe spool erection less than 2" carbon steel. The PCOA coding process begins with the material take-off and links through procurement, accounting and finally the cost management system. This provides tracebillity of cost from the drawings to the final cost at completion.

Description	Code	Level
A: Overall Summary/Project & By Oilfield:		
Total Project Summary	--	1
Kirkuk Oilfield Summary	01	2
A: Engineering:		
Kirkuk Oilfield GOSP Engineering Summary	01-54E	3
For GOSP BABA of Kirkuk Oilfield/Engineering Summary	01-54-01E	4
For GOSP BABA Piping Engineering Summary	01-54-01E-PI	5
For GOSP BABA Piping Work Packages	01-54-01E-PI-01	6
B: Construction:		
Kirkuk Oilfield GOSP Construction Summary	01-54C	3
For GOSP BABA of Kirkuk Oilfield/Construction Summary	01-54-01C	4
For GOSP BABA Piping Construction Summary	01-54-01PSC#1	5
For GOSP BABA Piping Construction work packages	01-54-01PSC#1-P1	6
C: Procurement:		
Kirkuk Oilfield GOSP Material Summary	01-54M	3
For GOSP BABA of Kirkuk Oilfield/Materials Summary	01-54-01M	4
For GOSP BABA Piping Material Summary	01-54-01Piping POS	5
For GOSP BABA Piping Material Pos	Detail Pos	6

Table 2. Typical Work Breakdown Structure

4) **Project Planning and Scheduling**: BRS will use Primavera (P3 for windows) Project Planner for planning and scheduling. This software is ideally suited for multiple work activity centers and remote job site locations. This state-of-the-art Project Planning software

allows multiple level scheduling and the flexibility for the required merging of CPM Network update data from multiple sources.

The project deliverables are an engineering, procurement and construction (EPC) schedule. This project schedule will be detailed using the principles of a planning method developed by BRS called First-Planner. This planning method defines, in the early stage of the project, a detailed alignment of the engineering, procurement, construction, pre-commissioning, commissioning and plant start-up sequence. Priorities will be established to identify the critical path and minimize total project execution duration and corresponding cost. The principle of First-Planner is to use knowledge of rates for installation of bulk materials such as concrete, steel, pipe and cable to plan the best approach to executing the project. The project is then subdivided into manageable areas and the engineering and procurement activities are organized to support the construction plan. Engineering deliverables and procured materials are released at a rate that allows construction to proceed with maximum efficiency. First Planning methodology uses common unit measures and historical production rates for engineering, procurement and construction to predict activity duration and synchronize all work.

a) **Project Schedules**: Development and implementation of the schedule is required to assure that task force members associated with the project use the same milestones to meet the common project objectives. The following schedules will be developed on the project:

1) Project Master Schedules (PMS)

2) Front End Schedule (60-day effort to control critical activities)

3) CPM Network Schedule which provides detail supports for the PMS

4) Lower Levels Schedules by activity/deliverables which support the CPM Schedule

The project schedule activities are related to the project scope, budgets and responsible organization by means of the WBS codes. Schedules will be linked hierarchically from the discipline level networks at the most detailed level of the WBS up to the summary level schedules. The detailed level schedules will be developed from the engineering and procurement deliverables as required to support the path of construction within the major work blocks. Full traceability is maintained from activities at the lowest level to the summary level in the PMS. This allows a detail assessment of schedule variances and their effect on the overall project schedule. The following defines our approach in developing these schedules:

a) **Project Master Schedule:** This PMS is a bar chart schedule establishing key milestone dates throughout engineering, procurement, and construction. These milestone dates will become the fixed dates to be built into the detailed engineering, procurement, and construction schedules to be developed for each phase of the project execution. The PMS will be developed in detail with full input from engineering, procurement and construction to determine "pinch points" and to optimize the time allocation between major activities. This schedule will be reviewed with the Client.

b) **Front End Schedule (60 days look ahead):** This schedule will be issued within two weeks after the start of the project and covers, in detail, activities during the initial phase of the project. Its purpose is to provide schedule control until the CPM schedule is prepared and issued. The Front End Schedule is a "rolling-wave" look

ahead used during the first four months of a project and is focused on process design, equipment requisition and other front end activities.

c) **CPM Network Schedule:** The PMS will be supported by a detailed critical path network which will be prepared, showing engineering and procurement activities by geographical blocks and by suffixes at the beginning of the project. This ensures that the activities are completed in a manner to support the construction need dates and will show construction schedule by class. Ultimately this will include detail construction activities and milestones, pre turn-over activities, and turnover of the systems. The critical path network will be developed/updated using the following criteria:

1) To achieve the earliest system turnover possible within the existing constraints.

2) The manpower required to achieve each task within the time allowed.

3) The positioning of activities for optimal manpower leveling based on availability of data.

4) Status of work, planned against actual.

5) Highlight deviation from the plan in time for corrective measures and efficient control.

6) Lower Level Schedule.

Short-term detailed schedules will be developed outside of the CPM networks to address specific areas which the project control team monitors more closely to evaluate status. These short-term schedules are process schedules, critical equipment, look-ahead schedules, and pre turn-over activity schedules. These schedules will be used to evaluate intermediate status of partially completed segments of work.

Construction supports initial schedule development by providing rates of construction, path of construction, critical equipment requirements and area priorities. These requirements will be integrated with the engineering and procurement activity sequence depicted in the schedule.

d) **Construction Schedule:** As the project progresses, detail schedules will be developed showing the current work plans that focus on the project phases as follows:

1) Current work plan for construction – developed before engineering is 30% complete. This schedule will focus on front end (initial 50%) construction activities.

2) Current work plan for completion – developed before construction is 40% complete. This schedule will focus on back end (final 50%) construction activities, and identify integration of construction with planned turnover activities and shift from an area construction mode to a system mode.

3) Current work plan for turnover will be developed before construction is approximately 70% complete.

We will also prepare short-term and week-to-week planning and construction activity schedules. These will be prepared and updated weekly to show the past week, the current week and a four-week look-ahead. These provide a detailed view of the overall construction schedule.

5) **Schedule Control**: During the planning and development of the project schedules, the significant milestones will be identified along with intermediate measurement points leading to the achievement of the milestone. Schedule control is achieved, not by waiting until the milestone is completed, but by close monitoring and evaluation of the steps leading to the completion of milestones.

   Home Office schedule reviews will be held weekly, and field reviews conducted weekly. Activities of high criticality are monitored closely by the project control team and reviewed by the project management team and the Client using the "Last Planner" process. The Last Planner provides a method for maintaining a workable backlog from which practical work assignments can be made. This process identifies the sequence of activities to be performed, namely the work that should be done, the work that can be done and the work that will be done.

   At each reporting period, the project control team will update the schedules at the detailed activity level by compiling and verifying status reports from each of the reporting groups. This information is transferred to the CPM Logic Network Schedule to monitor and evaluate the status of the overall project. In cases where detail schedule status varies from the plan to the point where a milestone date may be in jeopardy, the project management team will review the specific and determine the corrective action to be taken. This could be a readjustment of the overall schedule; distribute available float between remaining activities or by providing additional resources to the affected activities to regain the original schedule. In addition, periodic reviews of key project activities are held. Standard project team review meetings include:

   a) Engineering Status

   b) Procurement Status

   c) Field Construction Status

   d) Turnover Systems Status

6) **Reports**: Planning and scheduling will prepare and issue the following:

   a) Engineering and Procurement Schedule Analysis: These reports will highlight and summarize activities adversely affecting engineering/ procurement progress. The report will identify each concern, reasons for the concern, and the corrective actions directed/taken, the responsible person/group to resolve the problem, and the predicted scheduled review meeting so that Project Management can be apprised of the concern and participate.

   b) Construction Status Report: The report will highlight/summarize activities adversely affecting construction progress. The report will identify each concern and corrective actions taken to mitigate the schedule slippage.

   c) Monthly Schedule Status Report: The report will identify activities performed during the month and planned next month. It will also communicate problems affecting the schedule. The report will identify each problem and its potential impact on overall schedule and actions recommended to mitigate schedule slippage or leverage resources from segments of work performing ahead of schedule.

7) **Progress Tables:** The tables will identify status of all activities in process by engineering and procurement personnel. The following tables will be issued:

   a) Equipment procurement status showing the material requisitions issued by engineering, quotations issued by procurement, quotes received and items committed.

   b) Subcontract preparation schedule and progress timelines.

   c) Drawings/specification status by each engineering group.

   d) ISO release curves.

   e) Structural steel drawing delivery status and fabrication status.

8) **Performance Measurement**: Key to performance measurement is the development and maintenance of a Performance Measurement Baseline; the alignment of the scope of work, schedule to accomplish the work and the associated budget for the work. Project Controls will develop a baseline budget based on the definition of work, organizational responsibility and the logical sequencing of work. The performance measurement baseline will be the reference point against which we compare the actual cost of work performed. The dynamic environment contemplated in the CSP requires we delineate work by near and far term activities. Activities in the near term are fully designed elements of work having a firm baseline cost and hours budget associated with the activities. This baseline will be populated in the cost management software at the control account level. The budget value for far term activities, segments of work still in the early design stage, will be held in higher level WBS elements called "planning packages" and will be assigned to cost accounts upon release of the design package. This creates a "rolling wave" budgeting technique that aligns development of a solid cost budget and schedule with the evolution in design. The sum of budgets assigned to control account and values held in planning packages will equal the performance measurement baseline. BRS will implement an effective progress and performance measurement system based on the following principles on the project:

   a) Define the work in terms of discrete deliverables.

   b) Plan when the work is to be done.

   c) Establish work hour and cost budgets for the scope of work.

   d) Allocate budget to set the performance measurement baseline, plan workforce requirements and produce planned progress curves.

   e) Utilize an earned work hour approach to evaluate progress and productivity.

   f) Measure physical progress objectively based on pre-defined milestones and rules of credit.

   g) Record actual work hour expenditures at the same level of detail as the budget was defined and progress is reported.

   h) Compare the planned progress and expenditure with the actual progress and expenditure.

   i) Analyze variances and trends and monitor productivity.

   j) Take action to avoid problems.

9) **Performance Basis and Measurement**: The Performance Measurement procedures will integrate the schedule with the budgeted work hours. This will create performance measurement baselines (planned progress curves) against which performance will be

measured. Physical accomplishment is measured by completing predetermined achievement milestones, not in terms of calendar time or expenditures, but for the actual progress of each work package. Performance Measurement baselines will be prepared for each work group and equipment class as defined below:

a) **Home Office Progress Measurement:** A budget and schedule will be established for each work package. Each Engineering group and other groups will distribute their work hour budgets to various work packages within their Discipline Codes. These individual budgets will be further subdivided to sub-level by deliverable documents (i.e. drawings, specifications and requisitions).

Engineering will be required to summarize the progress for each work package on a bi-weekly basis. The system will create resource loading curves and performance measurement baselines for each work package. The cumulative values from each reporting period will provide the scheduled, actual and earned progress curves at the discipline and overall project levels. The HO engineering productivity will be based on earned values.

b) **Procurement Progress Measurement:** Progress will be measured based on inquiry issue, quotes received, purchase orders issued, ready for delivery and receipt for each piece of equipment. Major bulk materials progress will be measured similar to the equipment.

c) **Construction Progress Measurement:** The Automated Craft Ledger Systems (ACLS) will be used for evaluating and reporting construction progress. The system focuses on the craft drawing takeoff approach. The system uses the quantity budgets for materials and work hours for progress determination. Credit is earned for actual quantities installed based on milestones then compared to the budget values. ACLS physical progress by weighted milestone will be imported to the schedule at the work package level. An example of the weighted milestone standards is shown in **Table 3**.

Activity Code	Milestone Description	Milestone (%)
C21	Precast Concrete	
	Prefab Rebar	35%
	Set Rebar	15%
	Set Forms	25%
	Pour Concrete	20%
	Strip Forms/Finish	5%
C22	Special Grade Slab	
	Set Rebar	20%
	Set Forms	30%
	Pour Concrete	40%
	Strip Forms/Finish	10%
S52	Piperacks	
	Reassemble	20%
	Erection	30%
	Bolt-on	35%
	Align/Hard Bolt	10%
	Finish	5%

Table 3. Example of Typical Construction Progress Weighted Milestones

The Construction Tracking System will allow the scheduler to perform an analysis of planned physical progress versus actual progress and highlight areas of concern in a formal narrative to project management. The schedule analysis will contain a critical path analysis, project milestone analysis and expended man-hour analysis.

10) **Tangible Quantity Reports:** Reports detailing tangible quantities will be prepared weekly, and summarized monthly at site. Examples are earthwork (CYD), concrete (CYD), structural steel (tons), equipment set (each), pipe (linear feet), electrical and instrumentation (linear feet) and insulation (square yards). All reports indicate the value of the installations in relation to the planned value both on a period and cumulative basis.

11) **Progress Curves:** The following progress curves will be produced for the Client and management review of the various aspects of the project:

a) **Engineering:** The engineering planned progress curve (early & late), for the entire project, by suffix and for each work group, will be calculated by the Work Measurement System and plotted as a function of the following:

1) Time frames (early/late start and completion dates)
2) Weighted values of the various activities in the progress measurement system
3) Actual percentage completion based upon the summarized earned values by work level for each technology group is then overlaid on the planned progress curve for each group indicating actual versus planned achievement for the group. The data of each group will be rolled up for overall engineering progress curve.

b) **Procurement:** The planned progress curves for equipment and major bulks for the entire project will be developed on an overall project level.

c) **Construction:** Construction progress curves will be developed at the overall by suffix and at project levels.

12) **Cost Control and Reporting:** Project Cost Controls Specialists are responsible for establishing the time-phased budget in the cost system, monitoring commitments and expenditures against control budgets in terms of cost, work hours, and quantities, cost trending analysis, forecasting and reporting. The Cost Control diagram in **Figure 1** (next page) illustrates the type of data in the cost system and the resulting output based on the data. This will be accomplished through a common coding structure defined by the work breakdown structure.

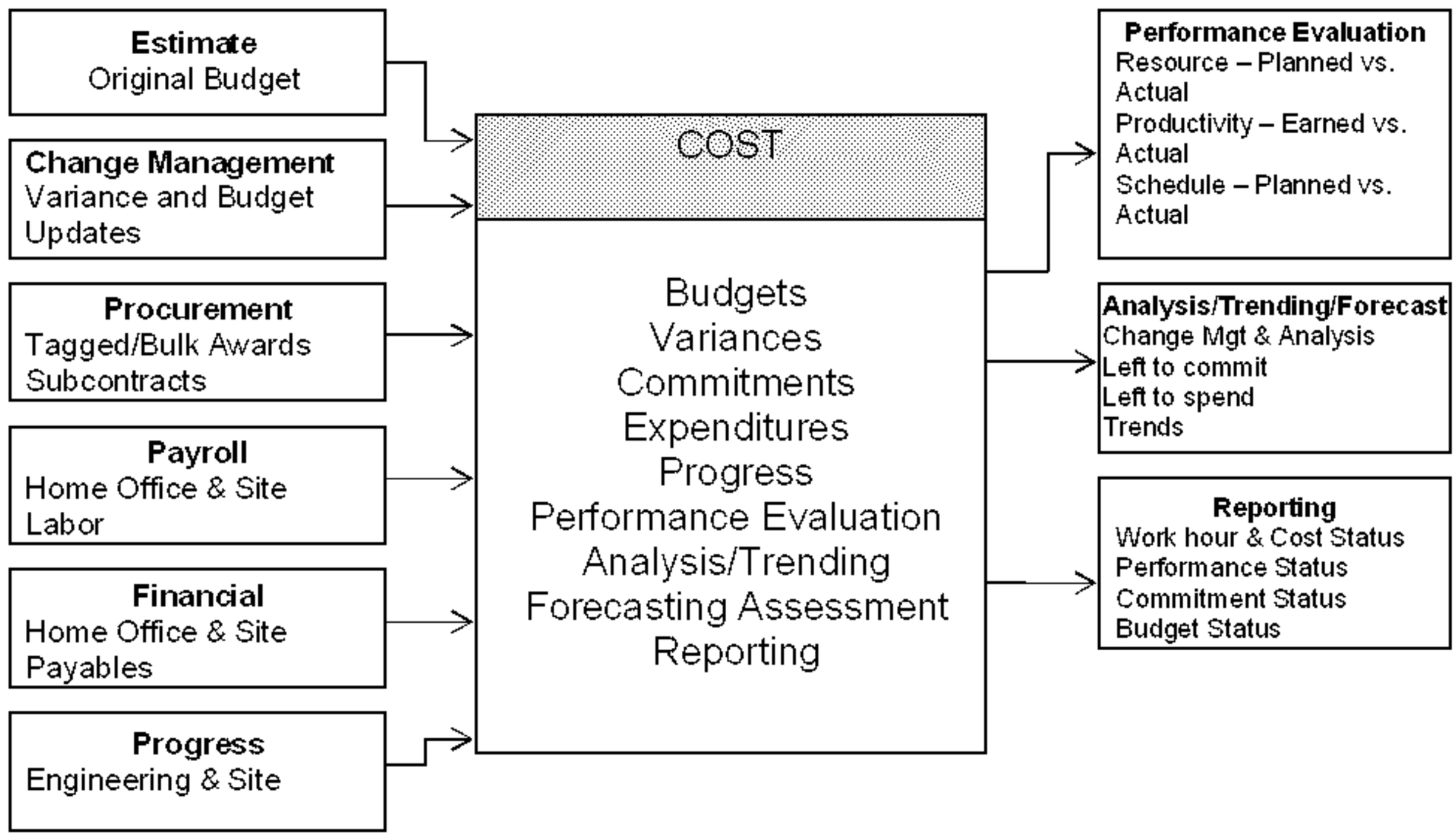

Figure 1. Cost Control Diagram

a) **Procurement and Accounting Data:**

1) Project Cost Specialist will track procurement of materials and equipment from the initial placement of a requirement through the issuance of a purchase order, receipt of material and finally to payment of vendor invoices. All bid summaries will be reviewed by project controls for actual value compared to the estimate to determine potential purchase price variances in the cost system. Project controls will assign the WBS coding structure to the requisition identifying the final cost objective. Procurement will place the WBS code on each purchase order. Procurement will place the WBS code on each purchase order and, once the order is released to a vendor, the value is committed in the cost system.

2) Subcontracts will follow a similar process as purchase orders with respect to requisition review and coding by project controls. For subcontracts involving scheduled construction effort, an additional requirement will be levied on the subcontractors to provide overall workhours and quantities installed. Work hour, quantities and milestone completion will form the basis for measuring subcontractor earned value and supporting subcontractor invoice payments.

3) Actual cost of work performed will be imported to the cost system from BRS' government approved accounting and labor system. All transactional data, current month and contract cumulative, is retained in BRS' is transactional processor which combines labor, accounting and procurement transactions in a single data base. This transactional data base electronically feeds summarized cost data to the cost system and provides transactional support to client invoicing.

13) **Change Management**: Key to maintaining the performance measurement baseline is a formal change management process. Because meaningful performance assessment and forecasting can only be made against the baseline, any changes to the scope of work must be incorporated in the budgeted cost and scheduled activities. Project management uses a formal change management process that identifies both external changes, those involving scope changes, and internal changes intended to adjust the estimate at completion or schedule due to efficiencies or problems in execution. The dynamic nature and time constraints contemplated in this CSP require a progressive approach to ensure that the value of authorized work is incorporated in the performance measurement baseline. For baseline maintenance there are four stages in the evolution of change to authorized work.

- Authorized but not yet estimated
- Authorized but not yet proposed
- Authorized but not yet negotiated
- Authorized but not yet incorporated into the contract via a formal change order

Each phase of this process results in a more precise cost estimate for the authorized work. To ensure the value of all authorized work, whether estimated or on contract, is part of the performance measurement baseline, the cost system will be configured to separately identify baseline changes at each phase. The principle tool to manage this process will be the "change control log" in the cost system. The sum of the baseline change values in the four stages will be combined and reflected in the cost reports as "Estimated Cost of Authorized Un-priced Work". The sum of the Target Cost and the Estimated Cost of Authorized Un-priced work will be the performance measurement baseline.

The change management process allows any team member to initiate a change. Each change will be reviewed by the appropriate supervisor who may approve or disapprove and halt further action. If action needs to be taken, the change will go to the Project Change Management Team (PCMT) which will be at a minimum, made up of the Controls Manager, Deputy Project Manager – Engineering and the Project Manager. Other Work Group Leaders will be included as required. The PCMT will meet at least weekly. During this meeting, the change will be determined as to its

- validity
- classification as a scope change or internal change
- need for any type of corrective action

If approved to proceed with the estimate of impact, the change is forwarded to the cost specialist to be logged and assigned a change number and distributed to the impacted engineering discipline and/or superintendent. If the potential change is a scope change, the change is forwarded to the Client to review the budget and/or schedule impacts to determine whether to proceed with the work or not. If approved, the project team proceeds with the change. If the request is disapproved, the change will not be implemented.

a) **Variance Analysis and Corrective Action Program.** Timely and accurate performance metrics for project management is a product of our earned value methodology and cost/schedule systems integration. To focus management attention to specific areas of the program project controls will structure a variance analysis system focused on elements of work that are performing outside preset tolerances. Project controls will establish in the cost system variance thresholds for each control

account based on the risk associated with the element of work. Work viewed as having the greatest risk to project success, both schedule and cost, will have lower positive and negative tolerances.

Project controls will structure exception reporting and drill down analysis for control accounts that perform outside the tolerances. These control account exception reports, both cost and schedule, will be addressed to project management and the engineering discipline and/or superintendent directly responsible for accomplishing the work. The project controls staff will work with the engineering discipline and/or superintendent to fully understand the deviation. The Project Manager and/or superintendent, with project controls support, is responsible for:

- Developing a narrative as to reasons for the deviation.
- Assess the current and long-term impact the deviation will have on the project outcome.
- Developing a corrective action plan to mitigate the impact on cost and schedule performance.

14) Forecast. The planning and execution of the project forecasting process involves the identification of high risk estimate components and a quantification of those components. Reviews of these elements will be scheduled at a point in the project life cycle when sufficient information is available. The timely identification of problem areas and the implementation of corrective action are key elements of the forecasting plan.

a) Quantity analysis will occur in each phase of the project with Engineering being the first phase and Construction the second phase. During the Engineering phase the cost specialist will work in concert with the discipline lead Engineers in the identification of quantity change. The level at which quantity change is determined will tend to be at summary level (i.e. linear feet of pipe, number of instruments, pieces of equipment). During this phase certain components are factored against the summary data to establish bulk material forecasted quantity.

During the construction phase of the project quantities are readily identifiable through IFC drawing take offs in the construction tracking system. The cost specialist will leverage this data in the support of detail quantity forecast for bulk materials.

b) Material analysis will be conducted through a continuous monitoring of commitments and expenditures against the control budget and forecast. In the case of equipment items and material purchases, the bid summary will be reviewed to ensure that quantity and unit prices are in line with the estimate.

c) Subcontract analysis will be performed during pre-award when budget and field need dates are reviewed in the bid evaluation process. On unit price contracts, the completeness of the bid package and past performance will be assessed and risk will be determined. Post award analysis looks at changes to the work scope, cost or schedule and identifies the change using the project established change management procedure.

d) The analysis of labor cost will be performed monthly by the cost specialist. An assessment of planned verses actual equivalent personnel associated with the engineering phase and for the indirect personnel in the construction phase will be made. Direct hire construction work, will be evaluated by comparing budget to actual work hour per unit.

15) **Reports.** Reporting will capture project status in the form of progress and cost for the period and changes to-date. The following reports will be issued:

a) Cost Comparison Report – Compares actual commitments and expenditures to earned values and forecast. It also provides a comparison of the amount of change taking place with respect to the forecast and budgets.

b) Commitment Report – Provides a comparison of purchase order committed amount to the expended.

c) Change Report – Provides a listing of the changes occurring between reporting periods indicating the amount of each change and changes to-date.

d) Schedule – As mentioned above in the Scheduling reporting section

e) Progress Status Report – Provides a comparison of actual to planned percent complete

f) Bi-weekly Report highlighting progress during the period, planned progress for the next period, areas of concern/action plan to mitigate concerns and the estimated cost at completion.

4. SERVICE SUPPORT. See Base PLAN and ANNEX I.

5. COMMAND AND SIGNAL. See the Base PLAN, ANNEX A, and ANNEX H.

ACKNOWLEDGE:

(b)(6)
BRS PGM, LOGCAP

OFFICIAL:
(b)(6) BRS D/PGM

APPENDIX 2 (ENGINEERING) to ANNEX F (ENGINEERING AND CONSTRUCTION) to LOGCAP CONTINGENCY SUPPORT PLAN

REFERENCES. See ANNEX N, Appendix 4.

TIME ZONE USED THROUGHOUT THE PLAN. Iraq.

TASK ORGANIZATION. See ANNEX A.

1. **SITUATION.** See Base PLAN.

   a. **Assumptions.**

   1) Design requiring authorization and approval from all local agencies having jurisdiction will not delay the work.

   2) Critical material and equipment will be purchased and staged in allied nations close to Iraq prior to the commencement of the field work.

   3) The exact condition of facilities and infrastructure inside Iraq and the resources required to reestablish production levels are not known; therefore, an assessment by teams of experts from our construction, procurement, HSE and engineering departments will be required.

   4) A portion of the detailed engineering can be performed throughout our global engineering offices (London, Singapore, Baku, Aberdeen, Monterrey, etc.). Particularly, we can utilize various BRS domestic and low cost engineering service providers.

   5) Modularization of various plant areas is being considered to expedite engineering solutions, allow early bulk equipment/material buys, and reduce field work-hours at site.

2. **MISSION.** See Base PLAN.

3. **EXECUTION.** See Base PLAN.

   a. **Concept of Operations.**

   1) **Engineering Strategy.** Following the assessment review, BRS will begin detailed engineering at our Houston office. Some of the assessment team will remain in Iraq to continue gathering facts and data for engineering use in completing detailed designs (e.g. equipment ratings/ nameplate information, tie-in location coordinates using advanced electronic surveying equipment, as-built locations of existing facilities, etc).

   2) **Organization and Responsibilities:** BRS' Engineering organization will consist of both home office and site personnel from our experienced BRS resources. The construction management staff will transition from the engineering office in Houston to the site for construction management execution. This will help to ensure the smooth coordination of the interfaces between the home office and the field. See Tab A – Engineering Organization Chart.

   3) **Home Office Engineering Organization:** The main activities associated with this Engineer Organization will be:

a) Participate in the development of temporary facilities requirements.

b) Participate in the development of the detailed schedules for the different reinstatement Projects.

c) Participate in modularization study work.

d) Participate in construction risk assessments.

e) Maintain a lessons learned database.

f) Input to HSE field plans and procedures.

g) Input to project specific start-up and commissioning procedures.

BRS' Monterrey Engineering Center (MEC) has been used in the past on a variety of domestic and international, as well as some of the previously mentioned global projects' operations centers. The scope of engineering services mix by discipline will be provided between Houston Operations Center (HOC) and any other selected service centers. All disciplines will provide field support as required and generate as-built documents which will be defined prior to project execution. Additional details on HOC and associated engineering center(s) coordination will be provided at a later date.

4) **Design Philosophies:**

a) **Safety/Quality:** Safety is of primary importance and all of our activities must be in conformance with Company Policy and Procedure 501, Safety and Security Policy. A project Health Safety and Environmental Plan, and a Project Quality Plan will be developed.

b) **Design Basis / Reference Documents:** During assessment, engineering disciplines' Work Group Leaders will develop a Design Basis Philosophy document and obtain agreement from the client. The agreed design basis document is formally transmitted to client. Key documents for existing facilities (e.g. equipment data sheets, etc.) should be reviewed with the client to confirm their validity. Documents that could result in significant rework should be field verified if possible.

c) **Customer Furnished Equipment:** For existing equipment that requires repair or replacement, the use of customer available equipment will be evaluated. Equipment available from the client that will meet the process requirements all be it different in physical dimension or out put will be concidered. The economics associated with schedule, additional design and construction effort for installation modifications will be evaluated.

d) **Units of Measure/Language:** BRS has performed work in both imperial and metric units of measure, metric units will be used. The English language will be used on all documentation and correspondence.

e) **Specifications & Standards:** BRS specifications and standards will be used as the initial basis for developing the Project specifications.

f) **Equipment / Line / Instrument / Document Numbering:**

(1) **Existing Numbers.** When equipment is required to be revamped because of partial damage, the existing equipment number will be used.

(2) **Equipment Tag Numbers.** BRS equipment tag numbers will be used unless directed otherwise. New tag numbers will not be required for existing equipment requiring internal modifications (e.g. tower tray replacement).

(3) **Instrument Tag Numbers.** BRS instrument tag numbers will be used. BRS will work with the client to reserve blocks of instrument tag numbers for project use.

(4) **Line Numbers.** BRS line numbers will be used. BRS will work with the client to identify blocks of line numbers for project use.

(5) **Client Drawing Numbers.** BRS will establish a drawing numbering system unless directed otherwise by the client.

(6) **BRS Document Numbering.** Documents and drawings will be numbered in accordance with BRS Company Procedure 2707 and the Document Management Plan to be issued along with all other Project plans.

g) **Drawing Title Blocks / Borders.** BRS title blocks/borders will be used on drawings unless otherwise directed by the client.

5) **Engineering Execution:**

a) **Safety.** The project is committed to the following safety principles:

(1) To develop and implement work practices and procedures that reflect safety as our number one priority.

(2) To ensure a safe and healthy work place for all BRS employees and those who work with BRS.

(3) To be the recognized leader in safety in engineering and design, construction, operation and maintenance of plants for the BRS's clients.

(4) To reduce and prevent accidents and injuries both in the Home Office and at project sites with a goal of zero incidents.

b) **Work Plans.** Each engineering group will develop "work plans" as required by their discipline's procedures. Work plans will be reviewed and approved by the discipline CTE and the Project Engineer.

Each discipline will update their workgroup Work Process Interface Diagrams (WPID) to reflect the Project Execution philosophy. Particular attention will be given to plans for incorporating modularization, maximizing pre-fabrication, and other execution strategies.

The following schedule acceleration actions will be reflected in the WPID's where appropriate:

(1) Early issue of approved Process Flow-sketches & Stream Summaries in selected critical areas for early start of P&ID development.

(2) Combined IDR/ICA P&ID issue.

(3) Super-sketch work to begin using marked up ICA P&ID's (pre-IPL P&ID's) (For cost estimate puuposes, super-sketches will begin in some areas using pre-ICA P&ID hand markups.)

(4) Piping Planning will begin using ICA P&ID's.

No deviations in the Project Engineering WPID are planned at this time. If deviations are identified at a later date, a marked-up WPID will be issued.

c) **Coordination and Client Approvals.** Refer to the Project Coordination Procedure contained in the Project Execution Plan.

d) **Project Schedule.** A detailed schedule will be developed for project control and progress measurement. Project Schedule Milestones are identified in the Project Execution Plan. The Project Schedule is contained in the Project Control Plan of the Project Execution.

e) **Progress Measurement.** Systems for Progress Measurement are described in the Project Control Plan.

f) **Change Control.** All changes in project cost and schedule will follow the process described in Annex F, Appendix 1, paragraph 3. b. 13.

A Project Deviation Notice (PDN) will be completed and submitted by the Work Group Lead (WGL) to identify any change which may impact cost and/or schedule. The Project Change Management Team will approve or reject the change, and will decide on the action to be taken.

g) **Extra Work Orders.** Additional scope will be added to the project using CCN's (Client Change Notices).

h) **Client Participation.** Client representatives will be present in BRS offices and will work with BRS personnel as an integrated team.

i) **Document Management Plan.** The Document Management Plan will be defined at a later date.

j) **Task Force Area.** The project task force area will be located in one of the agreed upon BRS Engineering operating centers in a designated location. The following disciplines may work from their home base locations depending on their level of project involvement:

(1) Architecture

(2) Exchangers

(3) Environmental

(4) Standards & Specifications

(5) Vessel Analytical

k) **Project Reporting.** BRS Project Manager will issue bi-weekly progress reports.

l) **Engineering Status Meetings / Status Reports.** A weekly internal Engineering Status Meeting will be held each Monday or any other agreed upon day of the week. Each WGL should submit a status report at the end of each week.

m) **Working / General Project Use / Leads / Weekly Status Meeting.** Engineering Status Review Meeting will be held with the Client on each Tuesday or the day after the agreed upon internal Engineering Status meeting day. The meeting agenda is:

(1) General Items (PE)

(2) Workgroup Status (WGLs)

- Significant Activities
- Schedule performance
- Heads up comments
- Issues/Concerns

(3) Key Needs (PE)

n) **Site Visits.** All site visits will be on a business trip basis. Travel Authorizations will be required for travel in order to track the number of visits.

o) **Confidentiality.** Any information and knowledge divulged by Client to BRS shall be regarded as confidential, at a minimum; otherwise, the information will retain the Client's assigned security classification.

- All confidential information issued by BRS shall be stamped with the appropriate classification.
- Any confidential BRS information shall be issued to any approved client personnel only.
- A list of approved client personnel will be identified and made available in the Project file.

p) **Engineering Computer Utilization.**

(1) A computer utilization plan (including list of software and version to be used) will be included as part of each discipline's work plan.

(2) A separate Computer Utilization Plan will not be produced.

q) **Materials Management.** BRS standard material specifications will be used. There are no other special requirements regarding material control. The Materials and Procurement Plan are contained in ANNEX I, Appendix 3.

r) **Quality Assurance.** The BRS Quality Management Process will be used continually to seek ways to enhance the quality and value of our work, while simultaneously eliminating inefficiencies and seeking cost reduction opportunities for the client. In the project execution we will:

(1) Define requirements clearly and completely before beginning the work

(2) Plan the work so that it can be done right the first time.

(3) Identify and eliminate potential obstacles in executing the work.

(4) Proactively identify causes of problems affecting our ability to do quality work.

(5) Continually seek improvements to our work process.

(6) Develop and issue audit schedule.

(7) Perform audits or ensure that audits are completed in accordance with project audit schedules.

(8) Issue audit reports.

(9) The Quality Plan is contained in ANNEX N, Appendix 7.

s) **Engineering.** This project will follow BRS documented quality system elements and techniques. Discipline Quality Plans should be developed as required by Discipline procedures. Each work group will follow the quality procedures consistent with BRS current practice for "Job Quality" work. Each work group will prepare a WOC (work operation classifications) matrix for the work. These will be reviewed and approved by the Deputy Project Manager - Engineering.

(1) **Design Reviews.** The following reviews will be conducted during the Execution Phase:

- Process Release Meetings
- Plot Plan Review
- Joint P&ID Client Reviews
- Combined Process Hazard Review / HAZOP Review /SIL Determination Meeting
- Peer Review
- PDS 3-D model reviews

The Technical Review and Consistency Check will be performed on the IPL2 P&ID's during the Execute Stage. A HAZOP-2 Review will be performed in the Execute Stage after supplier data is received.

t) **Design Control.**

(1) **Document Control (assuming use of DOCUMENTUM).** BRS will produce a document index. Discipline leads will provide Document Management with a list of planned drawings. BRS will get status of released documents from Documentum. Planned drawings will be shown with an XXX in the released field. Each discipline will maintain a register for their drawings.

A list showing the location of deliverables in the Released Cabinet will be distributed. Each WGL is responsible to keep an initialed "Record Copy" of their latest issued documents for auditing purposes.

(2) **Management of Change for Process.** This will begin after the HAZOP Review has been held. BRS Deputy Project Manager – Engineering will issue a Management of Change policy for the process design. A Management of Change procedure will be developed by the Process Safety group.

(3) **Non-Conformance & Corrective/Preventive Action System.** Quality control reviews and approvals and document control will follow the normal BRS procedures for each discipline. The WGL is responsible to ensure the quality of their group's work.

At the Deputy Project Manager - Engineer or Project Manager's discretion, independent audits/reviews may be conducted by the discipline's department and/or the Project Quality Manager to ensure the quality of a group's work product.

6) **Construction Support.** The construction sequence described in the construction plan (Annex F, Appendix 3) indicates the construction sequence engineering will support by concentrating on the following:

a) Priorities by area for erection and subsequently for system completion

b) Early completion of utilities to support pre mechanical completion and subsequent commissioning.

c) Impact of long delivery items.

d) Access for erection activities.

7) **Operations and Maintenance Support.** Engineering will support the start-up and commissioning effort as well as O&M as requested by that group.

a) **Tasks.**

(1) **Scope of Engineering Services.** BRS will provide engineering services as required to support fully integrated EPC activities including the preliminary assessments of the destruction of the Iraqi Energy Infrastructure. During and after receiving field assessment information, Detail Design scopes of work will be generated.

(2) **Process Engineering.** Process Engineering will, as applicable to the assessed damage requirements, perform engineering work required to complete the detailed engineering. The Process group will provide process flow diagrams and process calculations as required. Also, generate all process design data required for other engineering technologies to perform their particular work.

(3) The following is the list of process deliverables and activities to be preformed by Process Engineering during the execution phase of the project. The work will be performed in one of the Houston engineering centers.

<u>Process Activities and Deliverables:</u>

- Process Flow Diagrams as required

- Line Sizing Criteria
- Design basis
- Process Licensor Packages
- Utility Consumption / Requirement Summary
- Process / Utilities Heat and Material balances
- Process / Utilities Descriptions
- Compressor process data
- Control valve and flow element data
- Flare and blow down system design
- Relief system analysis
- Closeout

(4) **Systems Engineering**. Systems Engineering will, as applicable to the assessed damage requirements, perform engineering work required to complete the detailed engineering. The Systems group will ensure the relief valve hydraulics and other critical hydraulics are provided as required for IFC ISO's and piping models. The Management of Change (MOC) log will be maintained and an additional HAZOP will be conducted prior to IFC issue of the P&ID's. Also, a technical review and consistency check will be performed. The following is the list of deliverables and activities to be preformed by Systems Engineering during the execution phase of the project. The work to be performed in Houston and other various engineering centers will be provided at a later date. The activities would be listed separately to clearly identify the scope responsibility at each engineering center / site.

<u>Systems Activities and Deliverables Include:</u>

- Issue revised Control Valve, Flow Element, and Restriction Orifice Data Sheets as required
- Revise / generate critical hydraulic circuits as required
- Participate in Alarm Rationalization Effort
- Conduct a technical review and consistency check on P&ID's
- Maintain a MOC Log on all P&ID changes
- Participate in HAZOP
- Requisition and perform technical bid evaluations for specialty piping items and relief valves
- Review Supplier drawings as required
- Support the PDS 3-D model reviews
- Issue IFD / IFC P&ID's
- Issue IFQ / as purchased Engineering requisition work-sheets (ERW)

- Issue final Steam, Cooling Water, and other Utility Balances
- Issue IFC Tie-in Summary
- Issue IFC Line List
- Closeout

(5) **Equipment Engineering.** Equipment Engineering includes all engineering work performed by the machinery, vessel, and exchangers engineering disciplines. The Equipment Groups will, as applicable to the assessed damage requirements, prepare and/or update specifications, data sheets, and inquiry and purchase requisitions, perform technical bid evaluations, select suppliers and participate in Supplier Shop Coordination Meetings for all new and modified equipment components relating to the project. These include rotating equipment, packaged equipment, columns, reactors, vessels and vessel internals, and heat exchangers.

Equipment Engineering Activities and Deliverables Include:

- Prepare inquiry requisition packages and approved bidders lists for all required equipment.
- Prepare technical bid evaluations and recommendations for purchase for rotating equipment, packaged equipment, columns, reactors, vessels and vessel internals, and heat exchangers.
- Prepare inquiry and purchase requisitions for required spare parts
- Review and coordinate comments on supplier drawings, calculations, procedures and other documents for all equipment
- Evaluate supplier spare parts recommendations
- Analyze equipment lube requirements and prepare a lubrication schedule
- Design and requisition platforms, pipe supports and clips for columns, reactors, and drums
- Update drawings/data sheets for columns, reactors, drums and all other equipment and issue for construction
- Prepare outline and nozzle orientation drawings
- Issue engineering as purchased requisitions
- Review drawings and calculations for compliance with codes, specifications, and good Engineering practices
- Shop witness of tests for critical/essential equipment items
- Review and coordinate comments on supplier drawings for columns, reactors, drums and all other equipment
- Provide site assistance post equipment delivery
- Prepare Equipment Folders and Data Books
- Closeout

(6) **Piping Engineering.**

(a) Piping Design. Piping Engineering will, as applicable to the assessed damage requirements, be responsible for all piping design work (additions, deletions or modifications) through issuance of above and below ground isometrics for fabrication and construction. Piping Engineering activities will be executed at both the Houston (HOC) and other various engineering centers. The work to be preformed in Houston and various centers are listed separately to clearly identify the scope responsibility at each engineering office. The engineering split between offices will be provided at a later date.

Piping Engineering Activities / Deliverables Iinclude:

- Plant Layout in 3D PDS model
- Detail Piping Design Underground & Aboveground (PDS)
- MTO for Piping & Pipe Supports bulk material
- Mechanical Design Specialty Items (MDS).
- Demolition Drawings
- Update Tie-in Summary
- Preparation of ERW's and performing technical bid evaluations
- Supplier Drawing review
- Comments to P&ID's
- Drawing Index
- Plot Plan (PDS)
- Piping Plan Drawings
- Conduct Internal Design Reviews
- Conduct Client Design Reviews
- Interference Detection Process (IDP)
- IFC Underground & Aboveground ISO's.
- Model access egress corridors and equipment maintenance and drop areas
- Bulk material management and requisitioning.
- IFC isometrics
- Incorporate Design Review Comments from Client
- Develop Piping Plans.
- Run IDP's as required.
- Detail Design (PDS)
- MTO for Piping and Pipe Supports.
- Steam Tracing Specifications and Design

- Pipe Support Design
- Input to P&ID's
- Closeout

(b) **Piping Mechanical** (Stress Analysis). The scope of Piping Mechanical will, as applicable to the assessed damage requirements, review, design, and confirm the design of piping, pipe supports, and piping mechanical specialty items to ensure that the pipe stresses are under code allowable, equipment loads are under industry standards allowable and the pipe movements and vibrations are within reasonable limits.

Piping Mechanical Activities / Deliverables Include:

- Analyze load conditions of the major piping systems.
- Design loops as required.
- Design Piping Mechanical Specialties, i.e. expansion joints.
- Requisition supports and mechanical specialties.
- Provide comments to plant layout models.
- Provide engineering review for requisitions.
- Issue all pipe support and mechanical specialty drawings to construction
- Produce Pipe Stress analysis calculations for Critical Line List.
- Detail all pipe anchors, guides and supports.
- Review and sign-off isometrics.
- Extract support summary and issue.
- Closeout.

(c) **Piping Engineering Specifications.** BRS specifications will be used for the execution of this project, unless otherwise agreed upon contractually. BRS specifications group will supplement as required during detail design the specifications developed during the Define stage as necessary. All specification related activities will be executed in the Houston engineering office.

Key Activities for this Project Include:

- Specifications for piping, pipe supports and mechanical specialties.
- Develop "IOPMC" (Index of Piping Material Classes).
- Develop piping material classes.
- Develop class V summary.
- Develop Insulation, Fireproofing, Coatings, Data Sheets (IFCDS)
- Review piping specifications.
- Provide technical support.

- Closeout.

(7) **Civil / Structural.** A summary of the civil scope of work is as follows:

a) Site preparation design of the project area as required.

b) Roadway design for the project area as required.

c) Railroad design for the project area as required.

d) Foundation design for major equipment, pipe-rack, structures, and prefabricated buildings.

e) Design of the process sewer sumps as required.

f) Design common control buildings.

g) Structural steel design for pipe-racks, structures, buildings, and miscellaneous pipe supports and platforms.

h) Analysis and revamp of existing pipe-racks and structures.

i) Analysis and revamp of existing foundations for equipment, pipe-racks, and structures.

j) Analysis and revamp of any existing concrete compressor tabletop as required.

k) Foundation and structural steel design for the extension of the existing compressor shelter as required.

l) Design of additional sump for the existing cooling tower basin.

m) Design of pipe-rack and equipment modules.

n) Design of finished grading and paving.

<u>Civil/Structural Activities and Deliverables</u>

- Review and provide input to piping planning super-sketches
- Provide Civil/Structural input to the PDS plant layout model.
- Prepare civil standard concrete and structural steel drawings.
- Prepare material and subcontract inquiry / as purchased requisitions.
- Prepare MTO's and requisition packages
- Supplier data review
- Finalize Civil/Structural input to the PDS plant layout model.
- Prepare IFC drawings for underground exploration.
- Prepare IFC drawings for demolition of existing foundations and structural steel.
- Prepare IFC site preparation drawings.
- Prepare IFC pile/foundation location plans.
- Prepare IFC concrete and structural steel drawings.

- Prepare IFC finished grading drawings.
- Prepare IFC compressor and analog support foundations.
- Prepare material inquiry and as purchased requisitions for rebar, anchor bolts, miscellaneous concrete embeds, and structural steel.
- Prepare transportation drawings for the equipment and pipe-rack modules.
- Closeout

(8) **Architecture.** The scope of the Architectural Group, as applicable to the assessed damage requirements, and to provide detailed engineering services for the architectural design and specification of buildings to include the design and specification of heating, ventilation and air conditioning (HVAC), plumbing engineering and fire protection systems. The Architectural scope includes Common Control Room (CCR) and Compressor building design. All work is planned to be executed in the home office.

Architectural Activities and Deliverables Include:

- Prepare in-place construction subcontract package from define stage documents. This includes all architectural, HVAC, Plumbing and Fire Protection drawings and specifications for Common Control Room (CCR).
- Issue inquiry and as purchased requisition and review supplier drawings for the pre-engineered building for the Compressor shelter.
- Coordinate work with other technologies within BRS.
- Closeout

(9) **Control Systems Engineering.** Control Systems Engineering (CSE) will, as applicable to the assessed damage requirements, be responsible for all instrumentation and control systems work. They will use the P&ID's and other documents developed during the assessment period, with minimum rework, to efficiently perform detailed engineering and design.

CSE will generate the instrument index and specification sheets using InTools software, and will prepare requisitions for inquiry and purchase of in-line and off-line instruments.

Design work will include preparation of drawings for instrument junction box, home run conduit and tray location drawings, instrument installation, wiring and mounting details, home run cable terminations, DCS, SIS and other System equipment and cable layout drawings, preparation of loop diagrams in accordance with selected project standards and loop folders.

CSE will provide complete design, configuration, programming and graphics for any selected DCS. CSE will write narratives, prepare logic diagrams for the client's approval, and will perform programming on any SIS (ex Triconex) based on Cause and Effect diagrams and SIS narratives.

CSE will work with the Electrical group in specifying the fiber optic system

(including cabling, hubs and routers) for telephone and data communications between the Control Rooms and any other type of Building. Based on the normal split of work, electrical shall assume responsibility for any CCTV, integrated telephone and plant PA systems. Design and specifications for wiring in each building associated with voice data system will be the responsibility of the Civil/Architectural group.

Following is the list of the deliverables and activities to be preformed by Control Systems Engineering during the execution phase of the project. The work to be performed in Houston and other various engineering centers will be provided at a later date. The activities would be listed separately to clearly identify the scope responsibility at each engineering center / site.

CSE's Activities and Deliverables Include:

- Update Work Plan
- Participate in P&ID development and HAZOP resolutions
- Visit the site (multiple visits) as required to support engineering activities
- Specify and procure DCS hardware and services
- Specify and procure SIS hardware and services
- Configure / program DCS and SIS
- Specify and procure Analyzer hardware and services
- Specify and procure any MOVs
- Produce Equip Layout Drawings as required
- Support Package Equipment effort
- Specify and procure all field instrumentation
- Produce a Summary (instruments to be modified, replaced, OK as is)
- Produce new and modified location plans (air and conduit routing)
- Produce new and modified installation details
- Produce new and modified wiring drawings (FJBs, MB, DCS terminations, UPS Power, etc)
- Produce new and modified loop drawings.
- Produce loop checking folders with loop diagram, data sheet, loop check sign-off sheets.
- Produce demolition drawings for loops, wiring, control and analyzer buildings
- Complete the PDS detail model of the CSE equipment
- Model review and update for in-line instruments
- Participate in internal and client model reviews
- Prepare and issue instrument and junction box location plans

- Prepare and issue JB wiring loading diagrams
- Prepare and issue simple and standard instrument loop drawings
- Electrical and support detail assignment
- Participate in impulse (process and air) detail assignment
- Prepare MTO's from instrument details and instrument index
- Closeout

(10) **Electrical Engineering.** Control Systems Engineering (CSE) will, as applicable to the assessed damage requirements, be responsible for all instrumentation and control systems work. They will use the P&ID's and other documents developed during the assessment period, with minimum rework, to efficiently perform detailed engineering and design.

Electrical engineering is responsible, as applicable to the assessed damage requirements, for the engineering and design of all electrical power, lighting, grounding, cathodic protection, communications and electric heat tracing systems on the project. Electrical engineering will also perform the required system studies dealing with short circuit analysis, load flow analysis, motor starting and stability studies as well as relay coordination.

Electrical Activities and Deliverables Include:

- Update, Issue and maintain the electrical specifications
- Update and maintain the area classification drawings
- Update and maintain the electrical one-line drawings
- Update and maintain the load list and load summaries
- Prepare the electrical tie-ins summary
- Perform a load study and relay coordination study
- Prepare the electrical bulk MTO and requisitions
- Prepare all requisitions for the electrical equipment
- Perform all bid evaluations for the electrical equipment
- Review supplier drawings
- Prepare grounding, lighting and power distribution standard installation details
- Prepare grounding and power drawings for new installations within existing areas
- Prepare lighting drawings for new installations within existing areas
- Prepare special systems drawings (cathodic protection, communications, electric heat trace, etc.) for new installations within new and existing areas
- Prepare motor control schematic diagrams for new installations within existing areas
- Prepare interconnection diagrams for new installations within existing areas

- Prepare the cable schedule
- Complete the PDS planning model of the electrical equipment, cable trays (both electrical and instrument) and conduit pathways
- Complete the PDS detail model of the electrical equipment, cable trays and conduit pathways
- Prepare (extract and annotate) grounding and power drawings for installations within new areas
- Prepare (extract and annotate) lighting drawings
- Prepare motor control schematic diagrams
- Prepare interconnection diagrams
- Closeout

(11) **Process Safety and Fire Protection Engineering.** All Process Safety and Fire Protection activities will be executed in the BRS Home Office.

Process Safety and Fire Protection Activities and Deliverables:

- Update Fire protection Drawings
- Issue requisitions for inquiry and as purchased
- Conduct technical evaluations on suppliers bids
- Review Supplier Data
- Assist with HAZOP coordination
- Support Management of Change effort
- Review Area Classification drawings
- Closeout

(12) **Furnace Engineering.** Furnace engineering is responsible for the engineering and design of the new or rebuild furnaces as required. All of this work will be executed in the home office.

Furnace Activities and Deliverables:

- Furnace Analytical Follow-up
- 3-D Model
- Design Pressure & Temp
- Heat Balance
- Data Sheets (Burners, Fans, Furnace, Attemperator, etc.)
- Load Sheets (Steam Drum, Ammonia Vapor Skid)
- Furnace Foundation Loads
- Furnace General Arrangements

- Produce drawings for ERW Packages
- Produce IFQ / as purchased ERW
- Produce Technical Bid Evaluations and recommend supplier
- Review Supplier Drawings, Calculations, Procedures and other Documents
- Closeout

(13) **Pipeline Engineering.** Pipeline Engineering will evaluate the assessed damage reports and perform all engineering and design work required to provide the proper reports, design documents, certifications, etc. to meet local Energy Authority requirements. Pipeline Activities and Deliverables will be determined later.

(a) Pipeline Engineering Activities / Deliverables Include:

- Assessment and repair or replacement
- Evaluate Damage Assessments
- Repair/Replacement Engineering
- Specifications for Pipeline Repair/Replacement
- Specifications for Flowline Repair/Replacement
- Specifications for offshore repair materials and services
- Specifications for Detailed Offshore External Pipeline Inspection
- Specification for Internal Pipeline Inspection
- Specification for Pipeline Pressure Test and Recommissioning
- Up-dated pipeline as-built drawings
- Close-out

(b) New Pipeline Construction Activities / Deliverables Include:

- Preparation of Design Basis
- Specification for Route Survey
- Pipeline Design Engineering, Analyses, Calculations and Reports
- Route Selection and Preparation of Pipeline Alignment Sheets
- Material and Equipment Specifications (Line Pipe, Valves, Flanges, etc)
- Construction Specifications
- Specifications for Line Pipe, Valves, Flanges, etc
- Specification for Pipeline Pressure Test and Commissioning
- As-built drawings
- Close-out

(14) **Marine Terminal Engineering (To be defined later)**

(15) **Naval Architectural Engineering (To be defined later)**

4. SERVICE SUPPORT. See Base PLAN, and ANNEX I.

5. COMMAND AND SIGNAL. See Base PLAN, ANNEX A, and ANNEX H.

ACKNOWLEDGE:

(b)(6)
BRS PGM, LOGCAP

OFFICIAL:
(b)(6) BRS D/PM

Tab A – Engineering Organization Chart
Tab B – Assessment Teams
Tab C – Wellheads & Reservoirs
Tab D –Water Injection
Tab E – Flowlines
Tab F – Gas Oil Separation Plants
Tab G – Gas Handling
Tab H – Pipelines & Pump Stations
Tab I – Intermediate Terminals
Tab J – Export
Tab K – Power Grids
Tab L – Infrastructure
Tab M – Critical Materials List

TAB A (ENGINEERING ORG CHART) to APPENDIX 2 (ENGINEERING) to ANNEX F (ENGINEERING & CONSTRUCTION) to CONTINGENCY SUPPORT PLAN

Note: Personnel may shift between work areas to accommodate special needs or manpower

(b)(4)

(b)(4)

BRS Proprietary Data. In addition to protection under Federal Acquisition Regulation 3.104, this page contains information which may be withheld from the public because disclosure would cause a foreseeable harm to an interest protected by one or more Exemptions of the Freedom of Information Act, 5 USC Section 552. Furthermore, if the SECRET level classification is downgraded, it is requested that any Government entity receiving this information act in accordance with DoD 5400.7-R, and consider this information as being for official use only (FOUO), and mark, handle and store this information so as to prevent unauthorized access.
Otherwise, Treat as FOR OFFICIAL USE ONLY

TAB B (ASSESSMENT TEAMS) to APPENDIX 2 (ENGINEERING) to ANNEX F (CONSTRUCTION & ENGINEERING) to LOGCAP CONTINGENCY SUPPORT PLAN

REFERENCES. See ANNEX N, Appendix 4.

TIME ZONE USED THROUGHOUT THE PLAN. Iraq.

TASK ORGANIZATION. See ANNEX A.

1. **SITUATION.** See Base PLAN.

2. **MISSION.** See Base PLAN.

3. **EXECUTION.** See Base PLAN.

a. **Concept of Operations.**

1.) An Advance Party will deploy to Iraq within 72 hours of NTP. This team will assist in the identification assessment locations.

2.) Assessment teams will be hired, processed, and trained at the BRS office in Houston, Texas.

3.) Assessment Teams will forward deploy and will be prepared to conduct assessments of identified oilfields and facilities. Procurement personnel will remain in the region as a part of the Assessment Teams.

4.) Assessment Teams will evaluate design, engineering, HSE, procurement, well control, well production capabilities and construction analysis. Assessment Teams, with the assistance of an interpreter and local subcontractors, will gather professional observations and data and send it to the BRS Home Office in Houston for recommendations to and refinement of the plan. Select members of the assessment team will remain in country after the assessment period to continue the recovery process and oversee the site preparation.

b. **Initial Site Assessment Team.**.

1.) **Procurement & Materials Team.** See ANNEX I, Appendix 3.

2.) **Traffic Management Assessment Team:** See ANNEX I, Appendix 3.

3.) **Assessment Teams:** Assessment Teams will determine the extent of repair, refurbishment or replacement necessary to reinstate the different facilities; i.e., gas oil separations plants (GOSPs), wellheads, pumpstations, flowlines and gathering lines, crude stabilization plants, crude export facilities, oil & gas pipelines, refineries, gas plants, water injection plants, and gas compressor stations. Assessment Teams will use available transportation, including military aircraft to conduct assessments.

a.) **Team Makeup**: The BRS Site Assessment teams will be tailored to the mission. Teams will consist of all required disciplines to ensure a comprehensive report of field information. The assessment teams will be comprised of BRS expatriate personnel, contractor personnel, Third Country Nationals (TCNs), and Host Country Nationals (HCNs) operations/maintenance plant personnel, as available, to provide hands on knowledge of existing facilities. Below is an example team makeup:

(1.) **Engineering**

- Project Engineer
- Civil-Structural Engineer
- Piping Engineer
- Vessel/Mechanical Engineer
- Electrical Engineer
- Instrumentation Engineer
- Process Safety Engineer
- Marine Terminal Engineer
- Pipeline Engineer
- Well Field Production Specialist

(2.) **Construction**

- Construction Manager
- General Superintendent
- Plant Services Manager
- Rigging Superintendent
- Civil Craft Supervisor
- Piping Craft Supervisor
- E & I Craft Supervisor
- QA/QC Inspector
- Subcontractor well controls specialist

(3.) **HSE**

- HSE Manager
- Medic Specialist

(4.) **Operations and Maintenance**

- Operations Advisor
- Ops/Maintenance Specialist

(5.) **Support Personnel**

- Procurement and Traffic

- Laborers
- Subcontractors in specialty areas
- Communications
- Others

(6.) **Assessment**

(a.) **Field/Site Surveys and Testing** : The efforts for assessment and restoration will consist of the following major activities:

- Assessment
- Field/site surveys and testing
- Course Of Action (COA)
- Restoration
- Engineering/Design
- Electrical Equipment- (switchgear, motor control centers, UPS, Transformers)
- Communications
- Safety

(b.) Teams will survey the GOSP units for both the southern oil fields and the northern oil fields to identify the condition and the capacity of same. Also needed will be surveys of the substation transformers, the electrical distribution equipment, and local utility source to adequately supply the electrical loads of the GOSPs. The operating status or fitness for operation of the electrical distribution control equipment will be determined. The teams will note in their survey of the potential source for any equipment currently applied for other service that might be used for restoration of electrical service for GOSP loads. The assessment teams will visit all facilities for restoration as listed in (7) **Potential Assessment Sites** below, and perform their assessment survey in support of BRS Engineering, Procurement, and Construction for detailed planning and design.

(c.) Teams will also conduct surveys of local materials (surplus pipe, pipe fittings, equipment, etc) available and evaluate if acceptable for use during execution of this operation.

(d.) Etchings of equipment nameplate information will be made and returned to US experts for immediate evaluation and use during the detail design phase of the project.

(e.) Data will be communicated to forward based and US based experts for review. Whenever possible data will be transmitted real time. Each member of the assesment team will be provided a digital camera and will be able to download imagery to laptop computers. This imagery will be transmitted, with comment

via CD or internet to the Houston support base. Use of US military communications systems will be required.

(f.) BRS will need from the client all documentation (preferably as-built) of existing facilities that is available. If may be the client has a list of possible contacts which could assist in obtaining the data.

((1.)) **Reviews**: After the assessment review, BRS will procure the long lead material and equipment list necessary for repair and reinstatement of existing facilities. BRS will provide a recommended detailed list of these items to the client.

((2.)) **Engineering, Design and Construction**: Following the assessment review, BRS will begin detailed construction planning at the Houston office. As required, assessment team will remain in Iraq to continue gathering facts and data for engineering use in completing detailed designs (e.g. equipment ratings/nameplate information, tie-in location coordinates, as-built locations of existing facilities, etc). Some advanced surveying tools such as HICAD (digital capture) will be used for obtaining data to be used during detailed design.

(7.) **Potential Assessment Sites:**

(a.) **Oil Production**: Ten systems make up the Iraqi oilfield infastructure and require assessment visits are shown below:

((1.)) **Gas Oil Separator Plants (GOSPs):**

- South Rumailah GOSP 1Q
- South Rumailah GOSP 2S
- South Rumailah GOSP 3R
- South Rumailah GOSP 4J
- North Rumailah Central GOSP
- North Rumailah GOSP 2
- North Rumailah GOSP 4
- North Rumailah GOSP 5
- North Rumailah Janubia GOSP
- North Rumailah Shamiya GOSP
- Az Zubair Central GOSP
- Az Zubair GOSP 1
- Az Zubair GOSP 2
- Az Zubair GOSP 3
- Az Zubair GOSP 4

- Az Zubair Hammar GOSP
- West Qurnah GOSP 6
- West Qurnah GOSP 7
- West Qurnah GOSP 8
- Buzurgan North GOSP
- Buzurgan Southern GOSP 1
- Buzurgan Southern GOSP 2
- Buzurgan Southern GOSP 3
- Al Luhays GOSP
- Nasiriyah GOSP
- Majnoon GOSP
- Jabal Fauqi North GOSP
- Jabal Fauqi South GOSP
- Abu Ghurah North GOSP
- Abu Ghurah South GOSP
- Subba GOSP
- Nahr Umar GOSP
- East Baghdad GOSP
- Kirkuk Baba GOSP
- Kirkuk Shurau GOSP
- Kirkuk Hanjira GOSP
- Kirkuk Quton GOSP
- Kirkuk Saralu GOSP
- Kirkuk Sarbashkah GOSP
- Kirkuk Jabalur GOSP
- Bay Hassan North GOSP
- Bay Hassan South GOSP
- Saddam GOSP
- Khabaz GOSP
- Jambur North GOSP
- Jambur South GOSP
- Qayyarah GOSP

- Qayyarah Najmah GOSP
- Qayyarah Jawan GOSP
- Qayyarah Qasab GOSP
- Ayn Zalah GOSP
- Ayn Zalah Butmah GOSP
- Sufayah GOSP

((2.)) **Stabilization Plants**:

- Kirkuk Crude Processing Plant 1
- Kirkuk Crude Processing Plant 2
- New Kirkuk Stabilization Plant 1
- New Kirkuk Stabilization Plant 2

((3.)) **Pipelines**: (Crude 4350 KM, Products 725 KM, Natural gas 1360 KM)

- Iraq Strategic (contingency)
- Oil Pipeline from North Rumailah Central GOSP to Al Faw
- Oil pipeline from Az Zubair PS Z-1 to Al Faw Tankfarm
- Oil Pipelines from Al Faw South to Mina Bakr Platforms
- IPSA
- Iraq/Syria/Lebanon (contingency)
- Iraq/Turkey

((4.)) **Pump Stations**:

- Iraq-Turkey Pump Station IT-1
- Iraq-Turkey Pump Station IT-1A
- Iraq-Turkey Pump Station IT-2
- Iraq-Turkey Pump Station IT-2A
- Az Zubair Crude Oil Pumping Station Z-1
- Rumailah Crude Oil PST Strategic PPL PS-1
- North Rumailah Central GOSP Pump Station
- North Rumailah Central Gathering Station Pump Station PS-1

- IPSA Pump Station 1
- IPSA Pump Station 2
- IPSA Pump Station 2A
- Kirkuk Area Pump Station K-1
- Kirkuk Area Pump Station K-2
- Kirkuk Area Pump Station K-3

((5.)) **Flowlines & Gathering Lines and Wellheads**:

- Production oil fields in Southern Area
- Production oil fields in Northern Area

((6.)) **Crude export facilities**:

- Export Terminal/Storage Al Faw
- Mina AL Bakr
- Khor Al Amaya
- Abu Flus Terminal, Basrah
- Khor Az Zubair Terminal & Storage, Az Zubair
- Umm Qasr Terminal, Umm Qasr

((7.)) Gas Plants

- Gas Plant Az Zubair LPG Plant # 1, Az Zubair
- Gas Plant Az Zubair LPG Plant # 2, Az Zubair
- Gas Plant Az Zubair LPG Fractionation Plant, Az Zubair
- Gas Plant Rumailah LPG Plant
- Gas Plant Kirkuk H_2S Removal Plant
- Kirkuk "new" Gas Plant @ Crude Processing Plant-2
- Gas Handling Facility @ Saddam Fields, Baji

((8.)) Oil Refineries

- Basrah Refinery, Basrah
- Az Zubair Petrochemical Complex, Az Zubair
- Baji Refinery, Kirkuk

((9.)) Water Injection Plants

- Az Zubair Water Injection Plant
- Rumailah Water Injection Plant
- Kirkuk Water Injection Plant

((10.)) **Gas Compressor Stations**

- At Rumailah GOSPs
- At Az Zubair GOSPs
- At Kirkuk GOSPs

((11.)) **Power Grids**: BRS will receive necessary power at battery limits of each oil production/shipping facility from others. BRS will conduct regional grid assessments in concert/parallel with GOSP/pumping station assessment.

(8.) Follow-on tasks:: Once the initial assessments are completed, the Assessment Teams will transition toward detailed fact finding and data gathering. Some team members will revert to construction and engineering tasks in the resotration process, another significant portion will continue to perform assessments as sites become available or are identified. Assessment Teams will continue to operate until otherwise directed by the PCO/ACO.

4. **SERVICE SUPPORT**. See Base PLAN and ANNEX I.

5. **COMMAND AND SIGNAL**. See Base PLAN, ANNEX A and ANNEX H.

ACKNOWLEDGE:

(b)(6)
BRS PGM, LOGCAP

OFFICIAL:
(b)(6) BRS D/PGM

TAB C (WELLHEADS & RESERVOIRS) to APPENDIX 2 (ENGINEERING) to ANNEX F (ENGINEERING AND CONSTRUCTION) to LOGCAP CONTINGENCY SUPPORT PLAN

REFERENCES. See ANNEX N, Appendix 4.

TIME ZONE USED THROUGHOUT THE PLAN. Iraq.

TASK ORGANIZATION. See ANNEX A.

1. SITUATION. See Base PLAN.

a. Assumption. Typical damage to wells will be the destruction of the well head at or just below ground level by the detonation of explosive devices.

2. MISSION. See Base PLAN.

3. EXECUTION. See Base PLAN.

a. Concept of Operations. At the direction of the Principle Contracting Officer (PCO), BRS will deploy a forward team of engineers for wellhead assessments. Restoration of oil production to target levels will initially be a function of the current condition of wells in the Rumailah oil fields in southern Iraq and the Kirkuk oilfields in northern Iraq once Allied forces control the fields.

The oil and gas wells in Iraq are primarily located in two geographic regions . The Kirkuk fields in the north, and the Rumailah fields in the south. The southern Rumailah fields, because of their low pressure and location in relatively flat open terrain, will make loss of control events the most practical to deal with. The southern Rumailah wells are also low in poisonous/toxic gases which would other wise complicate the effort to regain well control. The northern fields contains Hydrogen Sulfide (H_2S) with some H_2S present in the southern fields.

The goal of this mission is to be prepared to mobilize equipment, personnel, and related services following an act that damages the well's production equipment and to restore the fields back to a target level of production . BRS will cap wells, mitigate environmental impact, and restore oil production to a target level of 2.4 million barrels of oil per day (MM BPD), within the shortest time period possible. The primary source of this oil will be from Karkuk field in the North and South Rumailah fields in the South. Approximately 1,400 producing wells are located in these fields.

Past experience in Kuwait has demonstrated that the surface damage type of oil field well control event can be dealt with efficiently in a reasonable amount of time. At the end of the Gulf War, 700 oil wellfires in Kuwait were extinguished and capped in an eight-month period.

1) Worst Case Scenario. The worst case scenario is that all wellheads in the northern and southern oil fields will be out of control and/or burning. Half will have damage at the surface only and half will have damage downhole

a) Typical damage to the wells is assumed to be the destruction of the well head at or just below ground level by the detonation of explosive devices. This exposes the entire wellbore to atmospheric pressure causing the producing formation to flow uncontrollably.

The oil flow stream coming out of the wellbore at the surface usually ignites. The uncontrollable flow may cause serious damage to the producing formation which would require extensive workover operations. Very specialized procedures and equipment are needed to bring these wells under control and back to production. Past experience with these type of events has demonstrated a very reliable procedure to cap and regain control of the wells. Experience in Kuwait suggests that approximately 80 percent of these wells can be reworked and brought back to production.

b) Much more severe damage to the well and the environment would be caused if explosive charges were to be placed down the production tubing and detonated. Considerable damage to the mechanical integrity of the wellbore and the producing formation in the near-wellbore region would result. The well may or may not flow to the surface depending upon whether the wellhead is intact and capable of withstanding the explosive force and whether there is an underground blowout. An underground blowout is where the formation flows uncontrollably to another formation which is at a lower pressure than the producing formation. This would make regaining control of the well a time consuming and difficult task, easily taking a month or more, per well, to regain control.

c) The average individual well production rate is estimated at 1,200 BPD under normal producing conditions. However, in the event of a blowout, flow rates in excess of 50,000 BPD could be expected and cause considerable lost production.

d) In addition to destruction of oil wells, attempts may also be made to destroy raw water pumping facilities. Significant volumes of raw water are necessary for oil well fire fighting activities. Significant volumes of treated water are also needed for water injection wells to assist in producing oil from the reservoirs. Water injection is considered part of the production and reservoir management activities associated with field production.

e) Under this worst case scenario, it is also assumed that 100 percent of all well files, maps, and data usually associated with oil field operations are destroyed. The preliminary assessment teams will inventory all wells as to visible degree of damage and prioritize wells for the engineering assessment teams to do a more detailed evaulation of each wellhead for firefighting and capping operations. A significant number of wells will have to have fires put out and brought under control before there is enough inventory of wells available for restoration and workover operations to begin.

2) Best Case Scenario. The best case scenario is that no wells in the northern and southern oil fields are damaged. It is also assumed that all well files, maps, and data usually associated with oil field operations are not destroyed and available for use. Therefore, the engineering assessment teams can immediately begin work to identify wells currently capable of bringing back onstream and prioritize other wells for workover. The teams will also review all available data to assess the reservoirs, prioritize wells to workover and bring back on production. The production operations and reservoir management plans can be implemented to restore well and field capacities to reach target production levels in as short a time as possible. Well workover operations are expected to be more extensive in the northern oil fields due to the presence of H_2S and corrosion affected wellbores.

3) Most Probable Scenario. The most probable scenario is that approximately 25 percent of the wellheads in the southern oil fields are destroyed and 50 percent of the wellheads in the

northern oil fields are destroyed. All of the destroyed wellheads are assumed to be out of control and burning (i.e. surface damage only). It is also assumed that 50 percent of all well files, maps, and data usually associated with oil field operations are either missing and destroyed, with the remainder being available for use.

a) The preliminary assessment teams will inventory wells as to visible degree of damage and prioritize wells for the Engineering Assessment Teams to do a more detailed evaulation of each wellhead for firefighting and capping operations. Engineering Assessment Teams will also review all available data to assess the reservoir and well performance and prioritize wells to bring back on production.

b) Concurrently, those wellheads that are not destroyed can be evaluated by the engineering assessment teams to identify wells capable of being brought back onstream quickly with little or no well work, and those wells that require workover to bring back on production. It is assumed that 80 percent of these wells will require workover and 20 percent little to no well work to bring back on production. In the most probable case, maintenance problems are expected in those wells that are not destroyed and the 80 percent figure accounts for these problems.

c) Following firefighting and capping operations, the affected wells will be restored and assessed for workover. Restoration and workover operations of capped/killed wells may be concurrent with firefighting and capping operations as the inventory of capped/killed wells builds.

d) The production operations and reservoir management plans can be implemented concurrently with the firefighting and capping operations. The goal is to restore well and field capacities to reach target production levels in a minimum amount of time.

b. Tasks. A wide range of services, personnel, and equipment will be required to accomplish the mission. Specialty contractors are available to provide the necessary expertise and resources for all such work, including:

1) Preliminary Assessment

2) Detailed Engineering Assessment

3) Well Control, Firefighting, and Capping

4) Well Restoration following Capping

5) Wellbore Evaluation, Workovers, and Restoration (Wells not out of control or on fire)

6) Reservoir and Production Assessment

7) Production Management

8) Reservoir Management

The initial assessment of well conditions will focus on the wells in North and South Rumailah fields identified as the first to bring under control. Assessment of remaining extreme southern wells (Az Zubayr and Al Luhais) will occur next. Wells in northern Iraq will not be available for assessment until 10 weeks after notice to proceed (NTP). Remaining southern fields will be

available 14 weeks after NTP, and the central field (East Baghdad) will be available 18weeks after NTP.

The first assessment, which will take place immediately after NTP, involves preparatory analysis, research, and investigation. This assessment will identify the type of equipment and components used on oil and gas wells in the region and the equipment and resources that may be available locally. This assessment will help BRS prepare the emergency response program and identify equipment needed to cap and restore the wells. Additionally, the assessment will facilitate the preparation for restoration of oil production.

Project management expertise unique for this event, residing in-house, will be used to develop a program to bring under control and cap wells in an accelerated period of time following an order to proceed. Project management expertise for the well restoration effort, also residing in-house, will be used, along with in-house technical resources/knowledge, to restore wells and manage field production in order to meet target production levels.

A project management system will be implemented to sequence well work in the effort to restore oil production to target levels. This is a key component that will manage the actual work program and will involve mobilization of firefighting and capping teams, wellhead equipment restoration, subsurface well intervention equipment and services including workovers and re-drills (if necessary), and environmental protection equipment and services. Also key to success, is the timely establishment of water supplies and safe egress to all affected wells. Parallel assessments will be made (independent and separate from well fire fighting activities) of available raw water sources in the southern fields area and in the northern fields area.

Preliminary Assessment

The preliminary assessment team will identify and inventory wells out of control, fires, wellheads compromised with some damage, and wellheads intact. It is assumed that, prior to the preliminary assessment team arriving, all explosives and ordnance will have been removed from the wellheads and downhole. The team will make a determination as to whether a well is producing, shut-in, abandoned, or an injector. It would be helpful at this point to generate and/or validate a "base map" consisting of wellhead locations (i.e. lat-long of the wellhead), roadways, GOSPS, etc. The team will prioritize wells for the detailed engineering assessment and firefighting/capping programs. Any wells whose wellheads are intact can immediately be assessed in more detail for remediation and restoration. Out of control wells will need to be brought under control and capped, and then assessed in more detail for remediation and restoration.

Detailed Engineering Assessment

The detailed engineering assessment can be split into three general operations: one concerned with firefighting and capping, one concerned with wellhead restoration and the third concerned with wellbore evaluation. These three operations can be concurrent depending upon which of the three conceptual scenarios are encountered and current well condition.

The detailed engineering assessment process can be summarized as follows:

a) Identify current well state.

b) Determine what work needs to be done to get the well back on production or injection as quickly as possible.

c) Create a plan to perform the well work.

d) Determine necessary equipment, materials, etc. for performing the work.

The engineering assessment consists of of detailed visual inspection of each wellhead. Information gathered from this visual inspection includes:

a) Identification and description of visible damage

b) Casing and tubing condition estimates

c) All flange sizes & pressure rating of each component

d) Wellhead manufacture

e) Type of well (oil, gas, water injection, salt water disposal)

f) Status of well (flowing, shut-in, temporarily abandoned)

g) Digital photo of well

h) Additional surface equipment and condition

i) Estimate ease of repair

j) Identify environmental concerns such as H_2S, smoke hazards, oil lakes, etc.

This information will be used in the firefighting /capping, wellhead restoration and wellbore evaluation programs to determine the couse of action and specific resources necessary to estimate well productivity and restore the wells. The analysis will establish a rating of each well based on the type and extent of damage and will establish a priority sequence for well intervention work to restore oil production to the target level. Typical equipment resources identified at this stage may include, but is not limited to, the following:

a) Capping stacks – spacer spool, blow out preventers and accumulators

b) Wellheads, tubing spools and Christmas trees

c) Downhole equipment

d) Tubulars – for casing and tubing replacement

e) Well service rigs, hydraulic snubbing units, coil tubing units

f) Pumping services: cementing, mud, and nitrogen pumping

g) Athey wagons

h) Capping wagons

i) Earth moving equipment - dozers (D8's), trackhoes, cranes, backhoes

Well Control, Firefighting and Capping

All of the necessary experience and capability for firefighting and regaining well control resides either in-house or accessible through pre-arranged alliances. Extensive in-house experience in the management and coordination of firefighting and well control efforts was gained after the Gulf War. This experience includes project management, coordination of personnel and equipment, provision of specialized equipment (such as the abrasive jet cutter for wellhead equipment removal), and pumping services for well control and well kill operations. Additionally, an inventory of well control and firefighting methods specific to Middle East oil operations was developed along with the knowledge of when and how to use these methods.

In the worst case scenario, all northern and southern oil field wells are damaged and out of control. Half of these wells have downhole damage, half have surface damage. For those wells that have downhole damage, it is assumed that the damage is severe enough that a relief well will need to be drilled. Downhole damage may result in an underground blowout. In such a case a relief well would be directionally drilled close to the point of blowout. Some type of kill fluid would then be pumped into the relief well to gain control of the blowout well. Once the blowout well is contained and plugged, the relief well will be sidetracked, drilled to TD, logged and completed. After the well is completed, the well can be tested and turned to production.

For wells having surface damage only, i.e. out of control and/or on fire, the firefighting teams will remove the wellhead, gain control of the well by various appropriate techniques, pump kill fluid down the wellbore, and/or cap the well. In most cases the capped/killed well should have no pressure at the surface.

Well Restoration Following Capping

Immediately following capping of out of control wells, well restoration will begin. Experience in Kuwait following the Gulf War suggests that the damage to each well (from being out of control and on fire) will be unique, ranging from some wells requiring only minor repairs to extensively damaged wells requiring wellhead removal, splicing of casing strings, fishing operations, and recompletion. Approximately 80 percent of the capped wells in Kuwait were restored; restoration was performed within an 18 month period. However, the Kuwait effort had access to wellbore schematics and well pressure data (prior to damage); this information may not be readily available or even exist for the northern and sounthern oil fields of Iraq.

The exact procedure for well restoration will have to be developed on a case by case basis. In general, restoration will involve moving in with a workover rig, tying back the production and tubing strings. With the well "dead", a new wellhead will be installed on the surface casing. The workover rig will then install blowout preventers. The production casing will then be repaired/replaced. A tubing spool will be placed on the production casing. The production tubing will be repaired/replaced. The well will then be recompleted, tested, and turned to production.

Most restorations will require a workover rig. If cement was used to kill the well during the well control operation, then the cement will have to be drilled out, most likely using a coiled tubing unit. Fishing operations may also be extensive depending upon what kind and how much "junk" is in the wellbore. The "junk" must be "fished" out in order to recomplete the well.

Wellbore Evaluation, Workovers and Restoration (Wells not out of control or on fire)

Following damage to a well's production equipment, the engineering assessment team will mobilize to the site and conduct a damage assessment. The team will assess the type and extent of damage to each well and determine the course of action and specific resources necessary to restore the wells. Their analysis will establish a rating of each well based on the type and extent of damage and will establish a priority sequence for well intervention work to restore oil production to the target level.

For a well that has not been damaged or capped, turning the well back to production may be as simple as opening a valve. However, there is little known about these wells and the well files and other generally available oil field records may not exist or readily available. Therefore prudence suggests that a well intervention process be followed.

Wells that have obvious wellhead damage will have to have their wellheads repaired or replaced before evaluation of downhole conditions can take place. This would generally involve killing the well with some type of kill fluid, verifying that no pressure exists at the wellhead, removing the wellhead, then replacing with a new wellhead. At this point, a downhole evaluation can take place.

Wells with no wellhead damage can be immediately assessed for whether the well has the capability to flow with little or no repair. The following procedure summarizes the general approach to assessing the downhole condition of the wellbore, i.e. identifying those wells that are capable of producing with little or no repair and those wells requiring workover.

a) Establish a safe zone around the wellhead (50-100 ft).
b) Two well operators walk in with Scott airpacks and sniffer to determine H_2S.
c) Check at every flange, bolt and valve.
d) Check operation of valves.
e) Lay out spill protection around wellhead.
f) Rig up slickline unit.
g) Tag run with impression block.
h) Run in with video camera, pressure/temperature gauge, other tools as needed.
i) Pressure gauge to determine current BHP.
j) Verify perforations, casing & tubing integrity, scale, etc.
k) Check flowline integrity.
l) If well has pressure, then it may be capable of flowing.
m) Open well up to test separator, take fluid samples (H_2S rated container).
n) Turn well to flowline if well will continue to flow and no major problems.

If the well will not flow, then perfom appropriate workover as determined from the slickline diagnostics. Rig up coiled tubing unit and clean out wellbore, perform a well treatment for scale, etc. as needed. If tubing needs to be pulled, rig up workover rig, pull tubing, perform workover. Workovers may include, but are not limited to logging, drilling out cement (in the case of capped wells), circulating out kill fluid (in the case of capped wells), perforating, acidizing, and hydraulic fracturing. The well can then be turned to production.

Ideally, priority should be given to those wells that are capable of high production rates and allow them to be assessed, remediated and put back on line quickly, if the productivity can be determined from well files, field personnel, visual inspection, etc.

The well control program and the detailed assessment program are concurrent, unless all wells are out of control (worst case scenario).

Injection wells will be handled in the same manner as production wells, i.e. assessing the wellhead and downhole conditions, performing any necessary workovers, and turning the well back to injection.

<u>Reservoir and Production Assessment</u>

If well files and other generally avaialble oil field records exist, then these records can be examined to determine each well's productive capacity, the reservoir in which it was completed, how the well was completed, properties of each reservoir, wellbore schematic, etc. This information is extremely useful and can give the teams very good knowledge of the subsurface, what to expect, and how to proceed during well operations. The information can then be used to prioritize wells for rework and provide an estimate of each well's expected productive performance. This provides baseline data for individual well, reservoir and field performance evalaution. This information can also be used to develop individual well forecasts as well as an overall forecast of the field's performance over time. Time to reach production targets can then be estimated. Well interventions and workovers can be prioritized and scheduled more efficiently, since reservoir and production information about each well will be known.

Usually a reservoir engineer, a geologist, and possibly a production or completions engineer will review the avialable oil field records to evaluate the geology, fluids, reservoirs, well completions, and well performance. Considering the size of the Iraqi fields, the number of reservoirs and the number of fields, the evaluation could take anywhere from several weeks for the smaller fields to several months for the large fields such as North and South Rumailah and Karkuk. This type of evalaution is done in support of the on-going wellbore evaluation, restoration, firefighting and re-drilling (for downhole blowouts) programs. The evaluation is traditionally performed at the location of the well files, but some of the work may be distributed to other support locations around the world if the oil field records exist digitally, or can be converted to digital data quickly.

If no data exists, then the reservoir and production assessment will have to be made by well intervention and evaluation. The most important issues are:

a) Mechanical condition of the wellbore. Problems need to be identified. Major problems need to be corrected before flow testing the well.
b) Perforation depths. At what depths are the wells perforated? Are the wells perforated in multiple reservoirs? Are the reservoirs commingled?
c) Type of completion. Single or dual, multiple reservoirs commingled, sand control problems.
d) Flow testing (oil rate, water cut, solids). What to expect when turning the well back to production.
e) BHP measured during the downhole assessment.

Information gathered during the downhole assessment process can be used to begin building a database of well and reservoir information.

In the case of wells being turned to production without any intervention, it is likely that these wells will have to be worked over in the near future to maintain productivity. The wells will be taken off-line one at a time, evaluated, and worked over. This strategy allows wells to come on production without intervention if they are capable of producing, thereby allowing oil production to begin at the earliest possible time. This strategy also allows minimum disruption to the field's oil production levels by taking wells off-line one at a time for re-work.

Production Management

Production management is necessary to ensure that individual wells are producing as necessary to meet target levels of production. If production from a well falls below expectation, then the well would have to be diagnosed as to what caused the problem and a workover planned to correct the problem. Since the northern and southern oil fields have water injection associated with them,

water breakthrough becomes a problem. Water conformance treatments will most likely need to be implemented to minimize water production and maximize sweep efficiency.

The on-going production management work will focus on reviewing historical production performance data and fluids (if available) to identify problems, trends and under-producing areas. Wellbore equipment in each well will be reviewed and modified as necessary to alleviate production problems (corrosion, scale, comformance, communication, production restrictions). This work will be coordinated with the geologist and reservoir engineer to identify and rank those wells that have the best potential for workover to increase the well's production if target production levels for the field are not being met. Additional work will include preparing workover procedures. Major tasks may include the following.

a) Prepare current wellbore diagrams.

b) Identify wells with zone isolation, conformance, mechanical, scale and corrosion related problems.

c) Review/Analyze prior workovers, completions and stimulations (if data available).

d) Analyze production performance by well, reservoir, pattern and field.

e) Selectively, review petrophysical data by well and cross-section (if data available).

f) Investigate water breakthrough problems related to injecting above fracturing pressure, high permeability layers, channeling behind casing and completion near oil-water contacts.

g) Investigate gas breakthrough problems related to high permeability layers, channeling behind casing and completion near gas-oil contacts.

h) Review/analyze available pressure information (if available) to determine permeabilities, skin factors, productivity indices, drainage areas, boundaries and fracture gradients.

i) Review available pressure, porosity-thickness, HCPV, WOR and GOR maps (if available).

j) Select and rank wells for workover and/or production enhancement.

k) Assist with design and optimization of workover/production enhancement operations.

l) Prepare workover/production enhancement procedures and economic evaluation.

m) Implement and supervise workover/production enhancement operations.

n) Supervise startup and monitor long term production of wells.

o) Optimize and modify procedures and processes as necessary.

p) Evaluate artificial lift potential.

Reservoir Management

Reservoir management is necessary to ensure that the reservoirs are managed at the field level to maximize oil recovery and meet target levels of production. Based on existing information and engineering calculations, fieldwide strategies are developed and initiated to reach target levels of production from the particular field. Strategies may include converting shut-in wells to water injectors to improve sweep efficiency, converting up-structure production wells to gas injectors in the event of secondary gas cap development, and selecting drilling locations for replacement wells in the event of wells watering out or being unable to produce at necessary rates.

Data related to the reservoir, production and field operations will be gathered, quality checked and put into the appropriate database as the data are acquired. Additional, any pre-existing data will be identified, cataloged, and incorporated in to the appropriate database where possible. These data will be analyzed and integrated with geological and petrophysical data (if available) to assist in selecting workover and production enhancement locations to maximize ability to reach oil production targets. Major tasks may include the following.

a) Gather, quality check and load data into appropriate database, as avaialble.

b) Evaluate reservoir rock and PVT data (if available).

c) Evaluate and/or validate pressure data, volumetrics and recovery factors (if available).

d) Perform nodal, decline curve and statistical analyses on selective wells and areas.

e) Prepare and analyze production and injection bubble maps.

f) Create pressure, porosity-thickness, HCPV, WOR and GOR maps.

g) Graphically analyze production and injection performance.

h) Analyze voidage/replacement by reservoir and selective areas (if data available).

i) Assist with selecting wells for production enhancement/workover.

j) Coordinate team review of prior and post production enhancement/workover recommendations.

k) Selectively, model performance of fracture stimulation candidate.

l) Assist with monitoring production performance and optimizing processes.

Well Control and Fire Response

a) **Firefighting/Well Control Teams.** Response to multiple, fieldwide well control and fire events of this magnitude will be addressed by firefighting and well control teams with the experience and capability of fighting oil well fires of this magnitude.

On a global scale, equipment and resources are available to work approximately five wellfires at once, within the first month of activities. BRS will preposition four teams and their equipment in Kuwait and will hire, process, and deploy the fifth team and its equipment.

Deployment of additional teams is limited by the availability of the specialized equipment required; another consideration is sychronization with U.S. Central Command's (CENTCOM) estimates of when fields will be available to BRS. Concurrent with CENTCOM's prosecution of the battle, BRS will aggressively recruit and train follow-on fire fighting teams and procure the requisite equipment. Working within those paramaters, BRS will provide a total of up to 25 teams within six months after NTP.

A turn-key approach for fighting well fires and regaining control of the wells will be used. The following is a list of the basic blowout response needs.

- Kill Fluids
- Frac Tanks & Mud Plants
- Transfer Pumps (charge HP pump suction manifold off of frac tanks)
- Vacuum Trucks
- Mud / Brine
- Batch Mixers (for use with specialty kill fluids and cements)
- Fracturing Pumps (high rate pumping)
- Cementing Units
- Civil Works (particularly needed if on fire or rig must be skidded)
- Bulldozers (min. two D8 w/ Cat Model 57 or Hyster winch)
- RD Crane (75 ton Rough Terrain)
- Pea Gravel / Boards
- Front End Loader w/ bucket & forks (Cat 950/966)
- Tracked Backhoe (Cat 235/245)
- Capping Crane (150 ton with 100-ft of boom)
- Welding / Fabrication Vendors
- Water Source for Firefighting (min. 9 BPM)
- Water Source Equipment (pumps, 3" fast line, pits, wells)

b) Water for Wellfire Fighting.

Plan for First Response Firefighting

This section covers the initial quick response required for the first few critical well fires, while the more permanent fire fighting infrastructure is being established. In order to respond quickly to the well fires, it is envisioned that equipment will be pre-positioned in a neighboring allied country. This equipment will consist of all required pumps, drivers, pipes, FRAC tanks, valves, instruments, controls and other miscellaneous equipment and accessories.

FRAC tanks serve as reservoirs and can be mobilized rapidly to the first critical well fires and therefore eliminating the construction time for earthen reservoirs. Based on available

information, typical FRAC tanks are approximately 500 barrels and provide water at flow rates of about 3000 to 4000 gpm. About 10 to 12 FRAC tanks will be required per well and it takes about 4 to 5 days to extinguish each well fire, including the set-up time. Fire fighting activities are performed only during daylight hours, approximately 10 hours per day. Water levels in the FRAC tanks will be maintained by utilizing a fleet of vacuum trucks or large tanker trucks, operating continuously, until a piped water supply system can be established. The number of trucks required will be based on distance and accessibility to the nearest water supply.

As an alternate, if water supply is not available within a reasonable distance, an earthen reservoir can be built close to the wellheads, to supplement the FRAC tanks. The earthen reservoir shall be heavily lined by HDPE material.

PLAN FOR LONG TERM FIREFIGHTING

RUMAILAH

Initial well fire fighting operations will include three fire fighting teams in the Rumailah fields (North and South) during the five months following notice to proceed. Each team will require 10,000 gpm of raw water supply. This water supply is needed continuously during the period of fire fighting operations.

To meet this requirement, two possibilities for raw water supply exist. One arrangement would include barges with diesel engine driven 10,000 gpm intake pumps. Initially, a total of three engine/pump sets will be required to support the three fire fighting teams. The barge(s) would be floated from the Persian Gulf up river to points beyond the Khawr Az Zubayr Marine Terminal. Additional engine/pump sets will be required to support the additional firefighting teams as the teams are brought on-line.

The second possibility includes using existing facilities for enhanced oil recovery water injection water supply. Details of this possibility are discussed in the paragraph entitled "**WATER INJECTION FACILITIES**" below.

SOUTH RUMAILAH FIELD (Barge mounted pumps)

One (or more) of the pump sets would be mounted on one barge. This barge would be located on the waterway northwest of the Khawr Az Zubayr marine terminal at the intersection of the existing crude oil pipelines that run to the Zubayr crude oil booster pump station. These pipelines include two 30" lines and one 24" line. One water pump would be tied into the 24" line. The remaining pumps would be tied into one (or both as required) of the 30" lines. The combined flowrate from these pumps would flow through the crude oil pipeline in the reverse direction to the Zubayr pump station.

Additional identical diesel engine driven 10,000 gpm pumps would be located at the Zubayr pump station. The number of pumps at this location would be equal to the number of pumps mounted on the barge. Each of these pumps would serve as boosters and would be tied into existing crude oil pipelines from the Zubayr pump station to various locations within the South Rumailah fields. Pumping locations from the Zubayr pump station to the South Rumailah fields would be identified at the start of fire fighting operations. If a given noted existing crude oil line is not of sufficient size for a given booster pump, the booster pump would require a new 18" discharge line to the fire fighting location.

The need for additional booster pump set(s) within the South Rumailah fields would be identified after well fire fighting activities are planned in order to support additional firefighting teams. If booster pump(s) are added, each would require an 18" discharge line to the required fire fighting well site.

NORTH RUMAILAH FIELD (Barge mounted pumps)

A second barge would be located on the waterway northwest of Khawr Az Zubayr Marine Terminal. This pump station would include one pump set for each fire fighting team located in the North Rumailah field. Each pump set would include a diesel engine driven 10,000 gpm pump (sixty psi nominal discharge pressure) mounted on an oil field skid complete with all required instrumentation, controls, valves, piping, wiring, cabling, and other accessories. Each skid would be mounted on the barge. The number of pump sets needed would be identified at the start of fire fighting operations.

A 48" crude oil pipeline exists to the north of the Basrah refinery. The pipeline runs east-west and intersects the waterway noted above. One or more pump sets would be tied into the 48" crude oil pipeline for pumping fire fighting water in the reverse direction to the North Rumailah field. The barge mounted pumps would generate enough head to pump to the North Rumailah field. Additional pump set(s) may be needed to serve well fires that are not in the proximity of the 48" pipeline. If booster pump(s) are added, each would require an 18" discharge line to the required fire fighting well site.

SUMMARY

South Rumailah field will require one or more barge mounted pump set(s) to furnish water to the Zubayr pump station and an equal number of identical booster pump sets at the Zubayr pump station to pump water to the South Rumailah field. Total number of pump sets cannot be identified until fire fighting activities begin.

North Rumailah field will require one or more barge mounted pump set(s) to furnish water to the North Rumailah field and one or more booster pump sets within the North Rumailah field to each respective fire fighting location. Total number of pump sets cannot be identified until fire fighting activities begin. See **Figure 1** (page 15) for a schematic diagram of facilities outlined above.

WATER INJECTION FACILITIES

It should be noted that water supply facilities exist at Basrah for enhanced oil recovery water injection into the North and South Rumailah fields. The facilities include four intake pumps with a total capacity of 34,000 gpm (8,500 gpm per pump). **Figure 2** (page 16) illustrates BRS' understanding of the configuration of the facilities.

The condition and extent of these facilities will be assessed at the beginning of fire fighting operations. If the existing pumps are not operable, new diesel engine pump sets would be installed and tied into the existing water injection system piping to the Rumailah fields. The possibility of using these facilities will be compared with development of barge mounted pumping facilities described above. If the water injection facilities can be made operable faster

than the barge approach, the water injection facilities will be used for initial well fire fighting water supply. The flow rate of water from these facilities can support four fire fighting teams.

ADDITIONAL FIRE FIGHTING TEAMS

Additional fire fighting teams will require one 10,000 gpm pump set per team. A total of eight barge mounted pumps (four to North Rumailah and four to South Rumailah) can be supported with existing crude oil pipelines as noted above. Full capacity from the water injection facilities can support four teams. Regardless of which water supply configuration is used initially (either water injection or barge mounted pumps), ultimately, capacity can be developed to support twelve teams in the Rumailah fields. Additional pumps and pipelines will be needed to support the final number of 15 firefighting teams in the south.

KIRKUK

Initial well fire fighting operations in the Kirkuk fields will include two fire fighting teams. These teams will also require 10,000 gpm of raw water supply each.

Water for enhanced oil recovery water injection operations in the Kirkuk fields is currently supplied from a facility on the Little Zab River. Details of KBR's understanding of the scope of these facilities is outlined in **Figure 3** (page 17). It is intended that these facilities will supply water for well fire fighting activities in Kirkuk.

This facility includes four raw water intake pumps each rated at 8,500 gpm. The condition of these pumps is not known. If the pumps are not in operating condition, an oil field skid mounted unit as described for Rumailah will be installed. These pumps will support the initial two well fire fighting teams. One additional pump will be required for each additional fire fighting team as these teams are brought on-line.

The layout and sizes of the water injection piping network is not known. If existing line sizes to any identified well fire fighting site cannot support the flow rates needed, a booster pump with an 18" discharge line may be required. This will be determined after initial assessment.

Piping from this facility can support a maximum of four fire fighting teams (with the provision for booster pumps as noted above). The need for additional water supply pumps will be assessed and implemented as firefighting sites are identified. Additional pumps and pipelines will be needed to support the final number of 10 firefighting teams in the north.

DIAGRAM OF PROPOSED RUMAILAH FIRE FIGHTING WATER SUPPLY

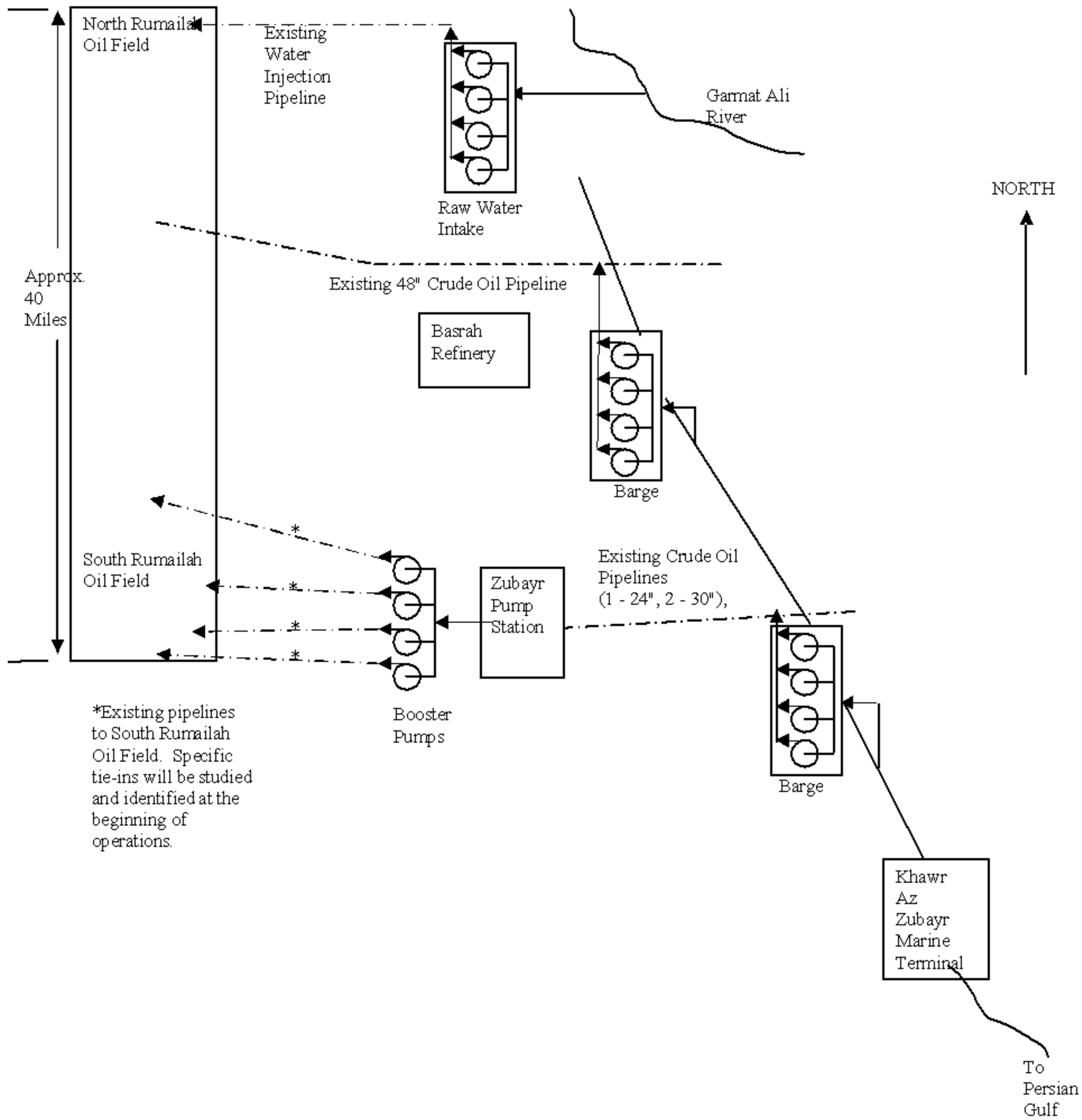

Figure 1

RUMAILAH FIELD
EXISTING OIL WELL WATER INJECTION
WATER SUPPLY

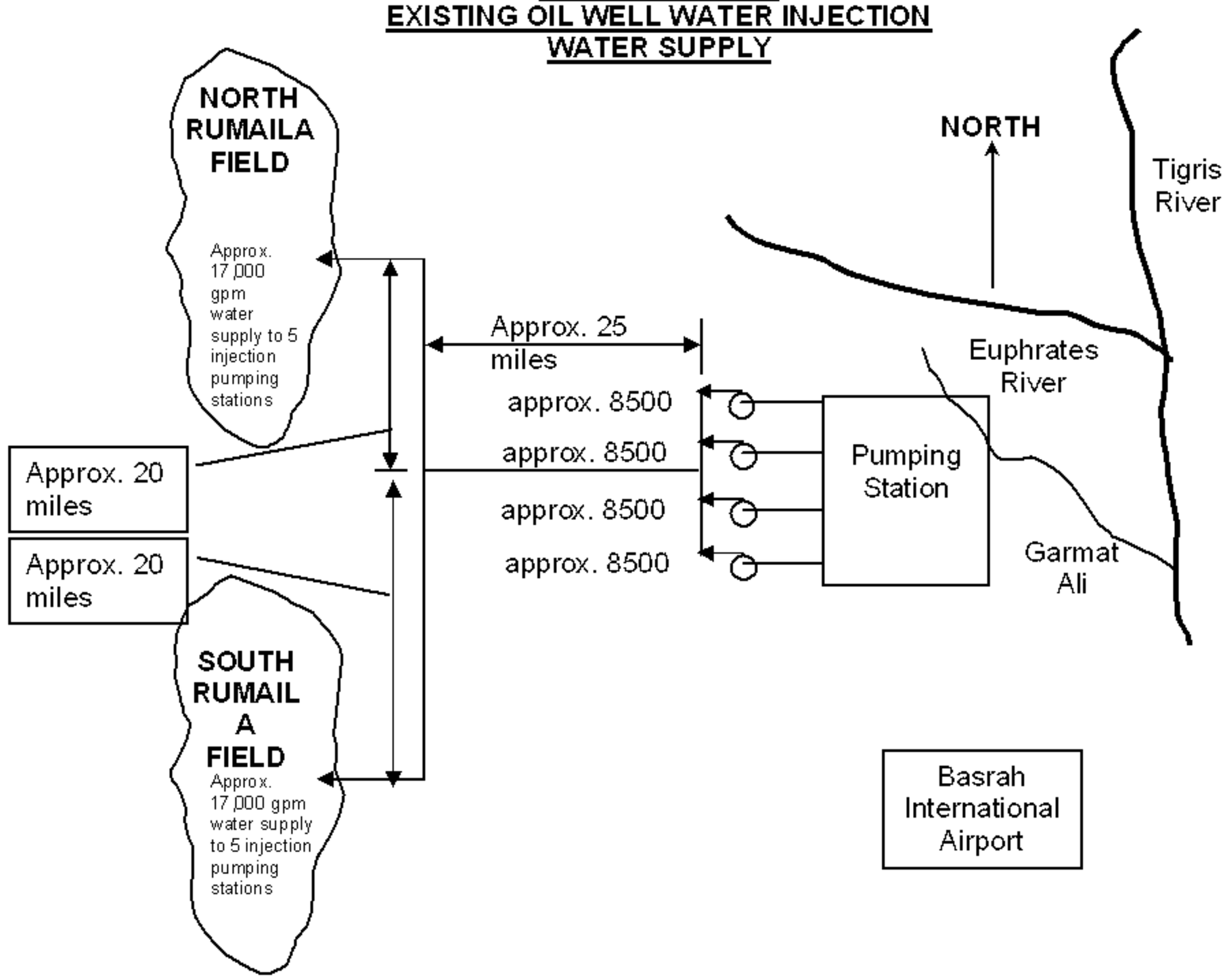

Figure 2

KIRKUK FIELD
EXISTING OIL WELL WATER INJECTION
WATER SUPPLY

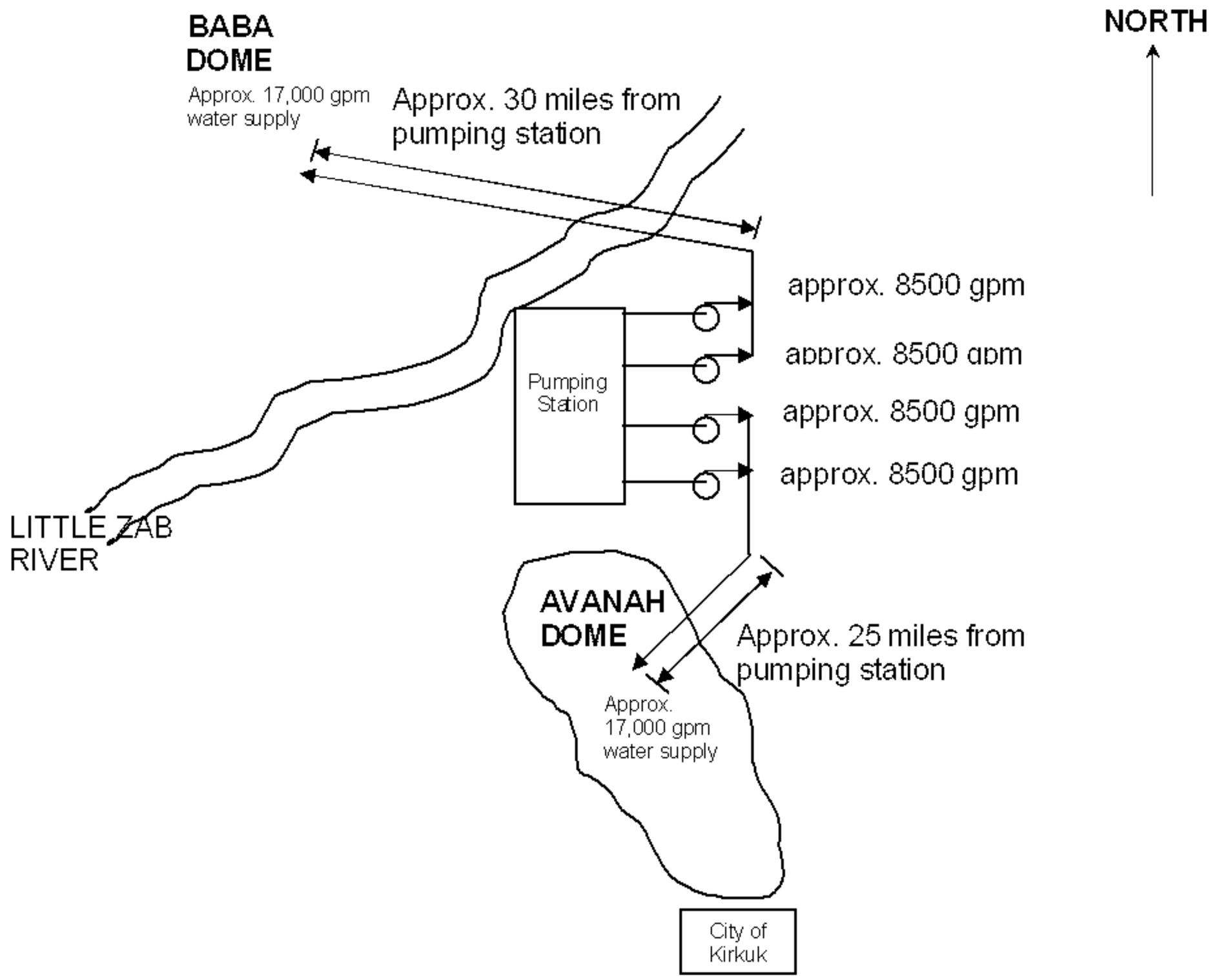

Figure 3

b) **Well Capping & Fire Fighting.** Initially, in the first five months after notice to proceed, there will be five specialty firefighting teams, two in the north and three in the south, all qualified to deal with this type of event. Each team will be assigned a list of wells to bring under control. Their objective is to cap or kill each well so that the Wellbore Remediation Phase can begin in earnest. Each team will cap a well in the South in seven days and a well in the north in fourteen days. This assumes no downhole damage.

(1) A worst case scenario for surface damaged wells is for all of the casing/tubing strings to be severed, with the well flowing uncontrollably. If H_2S is present above 10 ppm, the hydrocarbons will have to be ignited. The surrounding dirt will have to be excavated to enable cutting of the casing strings. A capping stack (with slip rams) will be placed over the production casing. The well can then be shut in and killed by

bullheading kill weight fluid down the casing. The capping stack will remain until the Wellbore Remediation Team can move in.

(2) Each Well Control Team will be mobilized with a modular Fire Fighting equipment package. Each team will operate under the supervision of an on-scene Commander, who will report to the Incident Commander. The personnel included in each team will depend on each specific situation.

The following is an overview of a typical blowout response organization. The event response organization will follow typical Incident Command System (ICS) guidelines for an emergency response effort. **Figure 4** illustrates a typical oilfield ICS command organization.

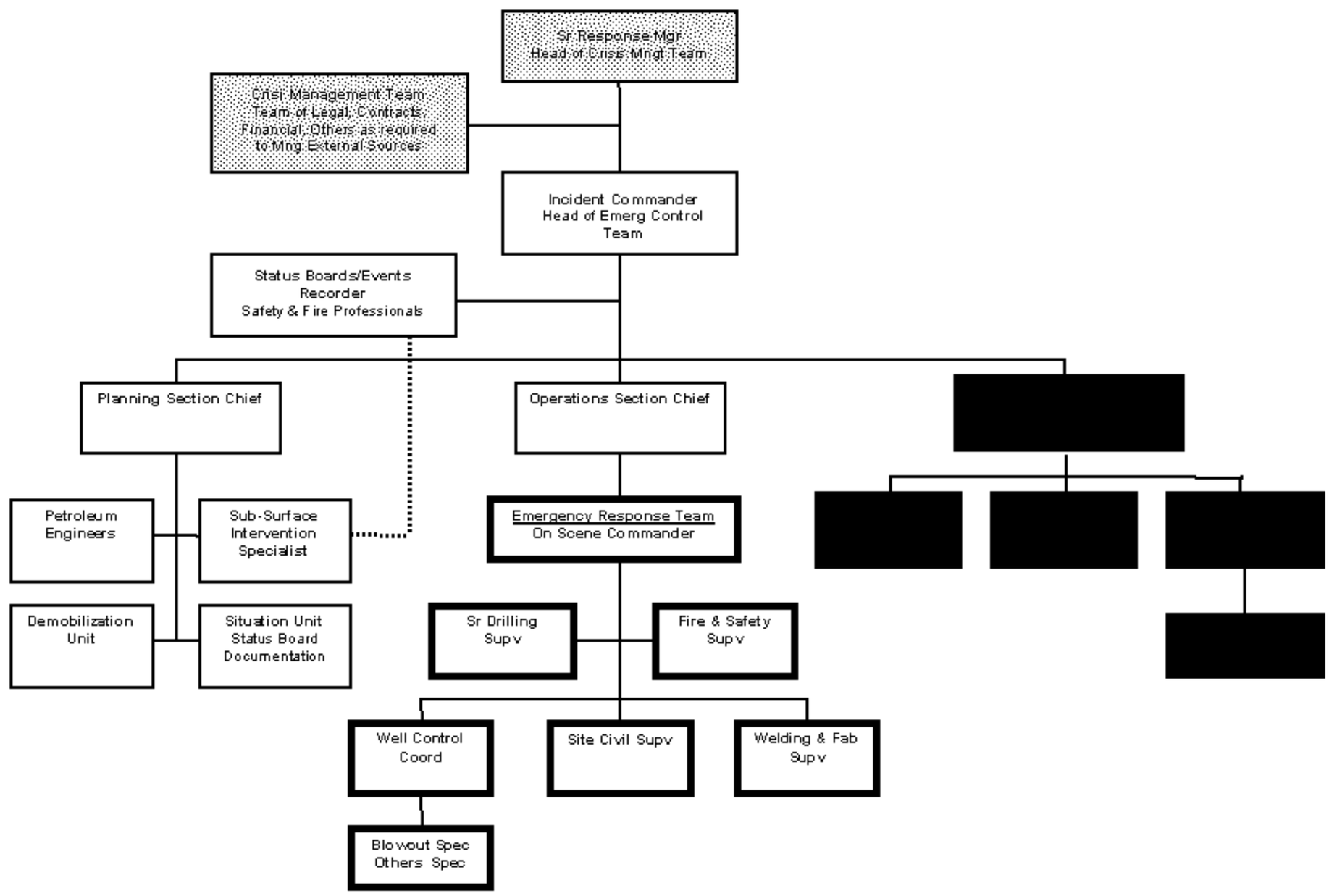

Figure 4. Incident Command System Organization

(3) The Incident Command System Organization is made up of the following major groups:

- Emergency Response Team (ERT)
- Emergency Control Team (ECT)
- Crisis Management Team (CMT)
- Emergency Command Post (ECP)

(4) Emergency Response Team (ERT). This operations response team is quickly assembled and briefed by the Incident Commander in Emergency Control Center and then moved to the nearby field facilities to set up an Advanced Command Post (ACP).

The ERT consists of the following:

- One Sr. Well Control Specialist
- Three Well Control Specialists
- Three Oilfield Helpers
- Two Heavy Equipment Operators
- One Welder
- One Welder Helper
- One Safety Coordinator/EMT
- One Nurse with an ambulance

It is important that each member of the team knows their specific responsibilities and reports regularly on progress and developments within these areas to the ERT Leader.

This team is the key to getting a blowout under control. The ERT will have continuous communicatin and be isolated from outside pressures so they can focus on the problem. This team will only deal with planning issues for the first 48 hours. It is the job of the Emergency Control Team (ECT) and the Crisis Management Team (CMT) to deal with longer-term planning and external issues.

(5) Emergency Control Team (ECT). The Incident Commander typically manages the ECT when there are blowouts and fires. The task of the ECT, illustrated in **Figure 5** (next page), will be to mobilize personnel and equipment (civil works equipment, firewater supply, etc.) to support the blowout response logistics requirements. The ECT should stay focused on blowout control and not external issues.

The Incident Commander will set up a system to:

- Receive regular updates from the ERT Leader
- Organize Job Responsibilities and Reporting
- Collect and Organize Obtained Information
- Organize Notifications and Communications

- Set Up Financial and Administrative Functions with help from the Crisis Management Team
- Brief the Project Manager so he can update the Crisis Management Team

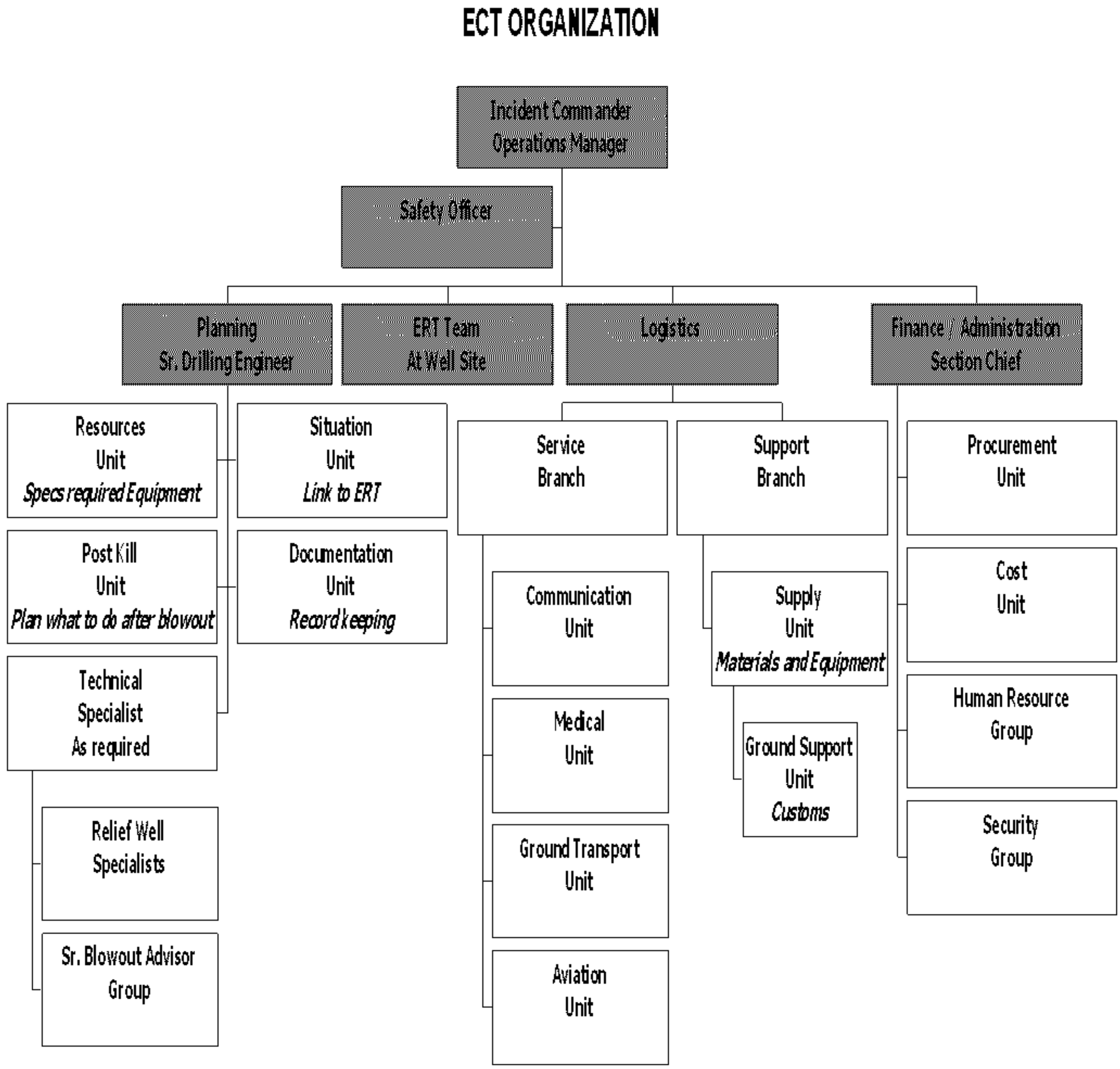

Figure 5 – Emergency Control Team Organization

(6) **Crisis Management Team.** The head of the Crisis Management Team is a Sr. Project Manager. The principal responsibility of the group will be to manage the outside issues regarding the blowout so the ERT and ECT teams can stay focused on the lose of control event.

Typical issues the Crisis Management Team must manage are:

- Outside communication
- Issues surrounding any deaths or severe injuries
- Oil spill issues on local environment
- High level governmental issues and meetings
- Incident investigations
- Media coordination
- Overall project and financial issues
- It is not this group's job to manage blowout control but to isolate outside issues from the blowout control operations.

(7) **Emergency Command Post.** This group will be set up within easy driving distance to the blowout well site. Additional phones and network connections maybe needed in the room. An ECP is seen in action in the picture, right. Note the status boards, phones, television, and assigned members with dedicated tasks. Anyone who walks into the room can be quickly briefed on the status of the response, weather forecasts, and current response plan.

Each individual works one part of the problem and updates the status boards. The Incident Commander sets up a system to post team information on the status boards to update the following :

- Well conditions
- Spill conditions.
- Logistical status
- Personnel movement
- Aviation movements
- Plans
- Weather

(8) **Safety Planning for Well Capping and Fire Fighting.**

- Select "SAFE AREA"
- Accessible by heavy trucks

- Accessible to wellsite
- Upwind
- 0 % LEL (Lower Explosive Limit as measured with available meters)
- <5 ppm H2S
- <85 dB Noise Level
- <1.6 kW / sq. meter heat load (equiv. summer sun on exposed skin)
- Define "HOT ZONE" Boundary
- >10% of a LEL (lower explosive limit)
- Surface pooling of hydrocarbons, gas bubbling, or water vapor fog
- >3 kW / sq. meter heat load (maximum heat load sustainable on exposed skin for more than a few minutes)
- >10 ppm H2S
- Boundary is generally a shorter distance upwind than downwind from the well and is variable as blowout and weather conditions change.
- Restrict Hot Zone access to only blowout specialists and personnel they brief and accompany. Minimize personnel in "HOT ZONE".
- Prepare Control Plan
- Pollution Containment
- Blowout Control Operational Plan Review
- Safety Meeting Guidelines
- Pre-job rundown
- Individual responsibilities and job site duties discussed
- Hazards review and mitigation steps
- Evacuation route
- Task Action Items to Emergency Response Team
- Individual responsibilities and job site duties discussed
- Hazards review and mitigation steps
- Evacuation route

(9) **Construction of Plastic Lined Wellsite Water Reservoirs.** Well firefighting will require 1,000,000 gallon water supply reservoirs per well fire. The water reservoirs will be located as required to support well fire fighting activities. BRS will build 1,000,000 gallon reservoir pits approximately 62 meters square with a depth of 2 meters, lined with polyethylene. At one of the corners, there will be a sump area at approximately 3 meters square, with an additional depth of .25 meters. The reservoir floor surface will slope down to the sump area.

The polyethylene liner will be shipped in rolls and welded out in the field by a subcontractor.

The reservoir will require a minimum of 5,000 gallon per minute re-supply rate for each major burning blowout and will continue to be filled after the firefighting shift ends, until it reaches its required volume.

4. **SERVICE SUPPORT**. See Base PLAN, ANNEX I.

5. **COMMAND AND SIGNAL**. See Base PLAN, ANNEX A and ANNEX H.

ACKNOWLEDGE

(b)(6)
BRS PGM, LOGCAP

OFFICIAL:
(b)(6) BRS D/PGM

TAB D (WATER INJECTION) to APPENDIX 2 (ENGINEERING) to ANNEX F (ENGINEERING AND CONSTRUCTION) to LOGCAP CONTINGENCY SUPPORT PLAN

REFERENCES. See ANNEX N, Appendix 4. The water injection description and condition are based on Reference 1, Report of the Group of United Nations experts established Pursuant to Paragraph 30 of the Security Council Resolution 1284 (March 2000). Reference 1 was prepared based on site visits to both the North and South water supply and injection facilities.

TIME ZONE USED THROUGHOUT THE PLAN. Iraq.

TASK ORGANIZATION. See ANNEX A.

1. **SITUATION.** See Base PLAN.

   a. **Assumption**. The current condition of the water intake, water treatment, and injection facilities in both the North and South is based on information contained in the UN Report (ref. 1).

2. **MISSION.** See Base PLAN.

3. **EXECUTION.** See Base PLAN.

   a. **Concept of Operations.** At the direction of the PCO, BRS will deploy an Assessment Team for the water supply and water injection systems.. The team will prescribe the necessary remediation efforts to restore the water injection system to the design operational levels. The assessment and remediation of the injection wells are covered separately in Tab C (Wellheads). Three potential scenarios – best case, most probable case, and worst case - are considered for assessment and repair/replacement of the water supply and injection system. The remediation of the subject systems is critical to the enhanced oil recovery operations and a key component in achieving higher production levels from the fields.

   Currently there are two separate main water injection supply facilities, one servicing the Kirkuk fields in the north, and the other servicing the Rumailah and Az Zubair fields in the south. In general, the facilities are in poor condition as a result of the lack of spare parts needed for repairs and general maintenance. In the south, the main water intake and treating facilities are located near the City of Basrah on the Garmat Ali waterway adjacent to the Euphrates River. In the north, the water supply and treatment facilities are located off the Little Zab River, situated between the Avanah and Baba Domes near Kirkuk.

   1) **South Facility.** This facility consists of an intake structure equipped with four lift pumps with a total capacity of approximately 1.2 million barrels per day (35,000 gpm), water treating facility, and 10 outlet pumps which move water to the injection facilities. See **Figure 1** (page 4) for a typical water supply and injection facility schematic. The treated water is distributed to 10 injection pumping stations in the North and South Rumailah Fields, and approximately 47 injection wells in the Az Zubair Fields. The total number of injection wells is not presently known for the Rumailah Fields.

   Currently only three out of the four intake pumps are operational, limiting the total capacity to approximately 1.0 million barrels per day (MM BPD), and only two of the 10 transfer pumps are operational. In addition, the pumps at the 10 injection pumping stations in the

Rumailah fields are also known to be in poor condition. The water injection system is limited in pressure and is not providing the proper volume and pressure to the required levels for the injection wells. The water treatment facilities were originally designed to filter particles down to 4 microns, however in its current state it can only filter particles down to 7 microns.

2) North Facility - Although detailed information is unavailable, it is known that the facility is designed to extract and treat 1.5 MM BPD (43,7500 gpm) of which 1 to 1.1 MM BPD (32,083 gpm) is injected into the Kirkuk fields. Based on the facilities in the Rumailah Fields, it is assumed that the facilities consists of an intake structure with filter screns and lift pumps, water treatment plant, tranfer pumps, and injection pumps. The treated water is distributed from its central location to the edges of the field, a distance of about 50 km (about 30 miles). As in the south, this facility is also in poor condition due to the lack of spare parts. Based on the UN Report, the chemical treament of water is currently being done manually since the automated system is not functioning properly also due to the lack of parts. Due to the poor general condition of the subject facilities, quality and rate of water injection is difficult to control.

b.) **Assessment**

Assessment of the North and South water supply and injection systems should be initiated early in order to identify the extent of remediation required, and to develop a list of replacement parts having long lead times. In general, extent of the assessment will be consistent for all assumed scenarios with some minor variations based on the amount of damage. The Assessment Team will include individuals from multiple relevent disciplines and vendor technical representatives for specialized equipment assessment. The major items to be assessed are as follows:

1) Concrete intake structure
2) Intake filters and lift pumps
3) Second stage filters and chemical injection package
4) Transfer pumps
5) Instrumentation and Controls
6) Corrosion protection system
7) Power supply
8) Water distribution pipeline
9) Water injection pumps and drivers

The assessment process should include, to the extent possible, interviews with the current plant operators in order to obtain information on the condition of the plant and to help focus the inspection efforts into the right areas. Inspection of the facilities will include visual inpections, non-destructive testing, and service testing as appropriate for the various pieces of equipment. Based on the findings, an evaluation will be done to determine the best course of action to remediate the plant facilities based on cost and schedule. In some cases, this will mean complete replacement of existing equipment/systems, and in some cases (subject to availability of parts) refurbishing the existing equipment/systems.

Water distribution system will also be inspected to assure that the quality of treated water will be maintained throughout the system. The inspection will be conducted in a similar manner as the inspection of the oil pipelines and will include check for leaks, corrosion, mechanical damage and cleanliness.

c) **Plan**

1) **Worst Case** - For the worst case damage scenario, it is assumed that the water injection supply facilities, one servicing Kirkuk Fields and the other servicing the Rumailah Fields, have suffered major damage with the exception of the intake structures. The water distribution pipelines are assumed to require 5 percent damage repair in addition to the normal wear and tear. The extent of the damage to the central water supply includes the intake filter screen, intake lift pumps, treatment facilities, transfer pumps and controls. In addition, it is assumed that the water injection pumps for the ten sets of pumping stations for the Rumailah and Kirkuk Fields are also totally destroyed. A total of 40 injection pumps at the Rumailah Fields and a total of 40 injection pumps for the Kirkuk Fields have been assumed to need replacement.

2) **Most Probable Case** - For the most probable case, it will be assumed that the four intake pumps for Rumailah and Kirkuk are in need of replacement. It will also be assumed that all intake filter screens will require replacement. However, it will be assumed that the structural integrity of the intake structure is sound.

   It is assumed that the treatment facilities, including chemical injection, at Rumailah and Kirkuk are not damaged but in need of maintenance. It is assumed that the 10 transfer pumps at Kirkuk and Rumailah have been damaged and require replacement. It is assumed that 20 of the 40 injection pumps at the Rumailah and Kirkuk pumping stations will require replacement. Therefore one-half of the water injection pumps will be replaced and the remainder of the pumps will be refurbished with the procurement of appropriate spare parts.

   It is assumed that 5 percent of the water distribution pipeline has collateral damage in addition to the normal wear and tear. The line will be repaired and cleaned prior to placing back in operation.

3) **Best Case** - For the best case scenario, it is assumed that the water injection supply facilities for both the KirKuk Fields in the North and the Rumailah Fields in the south are in a condition similar to the UN report for the South with no major war damage. Since the UN Report only provides information on the condition of the system for the Rumailah Fields, similar conditions will be assumed for the Kirkuk Fields.

   Based on the UN Report (Ref.1) for the south, three out of the four lift pumps at Garmat Ali are operating. The three operating pumps will be refurbished with the required spare parts and the remaining intake pump will be replaced with a new pump. As the UN Report did not comment on the condition of the intake structure, it will be assumed that the structural integrity is not compromised and no repairs are required. The intake filter screens are assumed to be in acceptable operating condition and are not in need of replacement. It is also assumed that the water treating facilities are not working to design conditions and require some repairs to the filtering system and chemical injection package. There are currently 10 transfer pumps at the water treating facility with only two operational. The two operating pumps will be refurbished with the required spares and the the remaining eight pumps will be replaced with new pumps.

   The UN report stated that the water injection pumps for the five sets of pumping facilities for North Rumailah and the five sets for South Rumailah were were functioning due to the lack of spare parts. It is assumed that the 40 injection pumps at the injection pump stations can be made operational with the provision of spare parts. The same assumptions apply at the Kirkuk Fields.

It is assumed that the pipeline will not have collateral damage and will require minor repairs due to normal wear and tear. In addition, it is assumed that the line will need internal cleaning.

TYPICAL WATER SUPPLY AND INJECTION SYSTEM

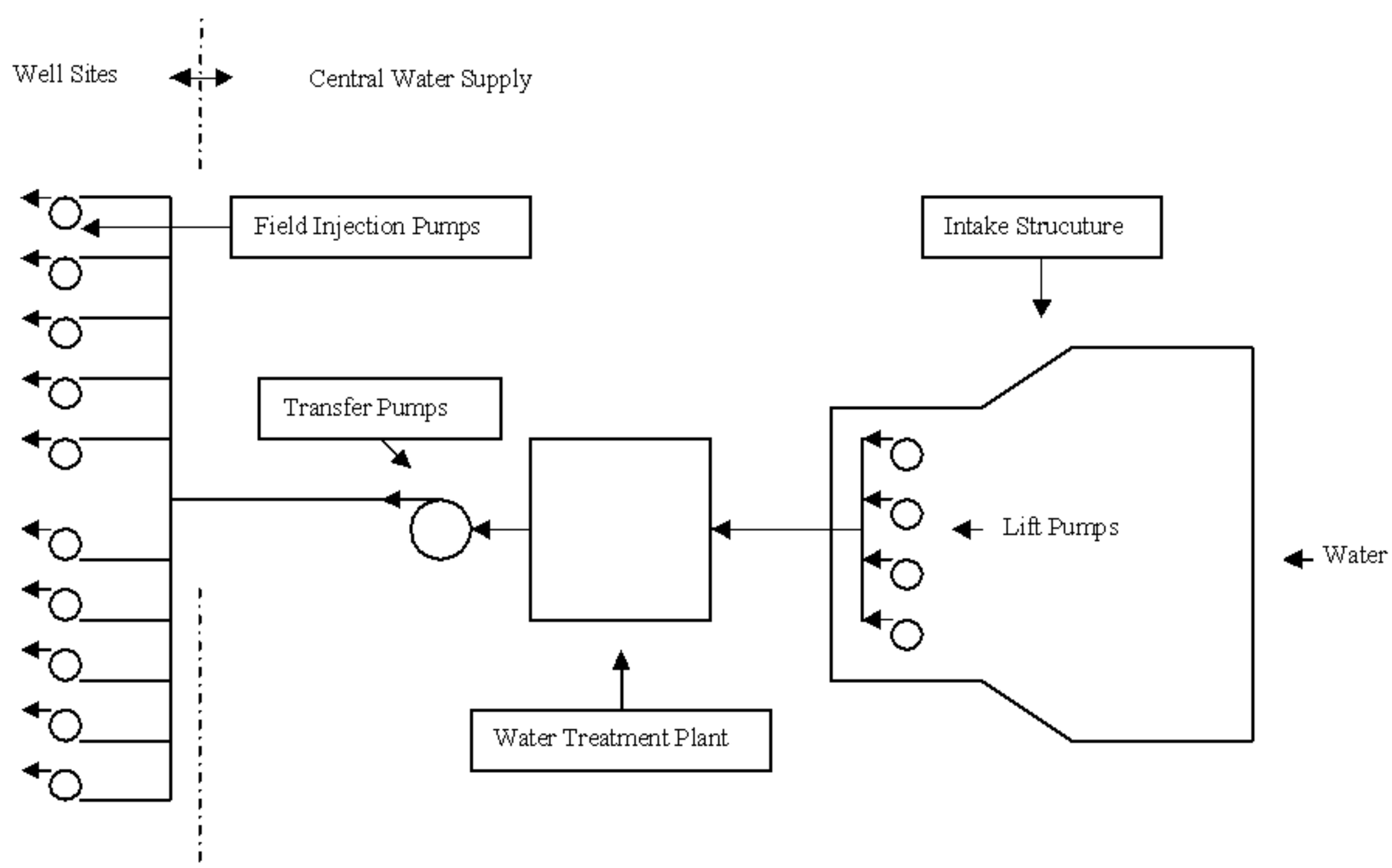

Figure 1

4. **SERVICE SUPPORT**. See Base PLAN, ANNEX I.

5. **COMMAND AND SIGNAL**. See Base PLAN and ANNEX H.

ACKNOWLEDGE

(b)(6)
BRS PGM, LOGCAP

OFFICIAL:
(b)(6) BRS D/PGM

TAB E (FLOWLINES) to APPENDIX 2 (ENGINEERING) to ANNEX F (ENGINEERING AND CONSTRUCTION) to LOGCAP CONTINGENCY SUPPORT PLAN

REFERENCES. See ANNEX N, Appendix 4.

TIME ZONE USED THROUGHOUT THE PLAN. Iraq.

TASK ORGANIZATION. See ANNEX A.

1. **SITUATION.** See Base PLAN.

   a. **Assumption.** This section is not based on specific knowledge of the state (condition) of flowlines or flowlines designs used in Iraq.

2. **MISSION.** See Base PLAN.

3. **EXECUTION.** See Base PLAN.

   a. **Concept of Operations.** At the direction of the PCO, BRS will deploy an advanced party which will perform the preparatory prioritization of the Iraqi crude oil infrastructure. The assessment team will be called forward and will be prepared to perform assessments upon arrival.

   b. **General:**

      1) Flowlines are the pipes that carry the fluids produced by the wells to a location where the first processing of the fluids occurs. Processing involves separating the gas from the liquids and may include separating the oil from the produced water. This location is most usually called the Gas Oil Separator Plant (GOSP).

      2) The diameter of the flowlines range from 4 to 12 inches nominal diameter. Most flowlines will be less than 8 inches nominal diameter.

      3) The lengths of flowlines range from a few hundred feet to five or more miles.

      4) The wall thickness of flowlines is relatively high since they are designed for the maximum pressure that the reservoir can produce at the wellhead i.e. the shut-in wellhead pressure plus an allowance for corrosion.

      5) Flowlines may be on the surface or may be buried or the flow line may have been laid on the surface and a berm built over it.

      6) There will be an individual flowline from each well. Individual well flowlines may be combined (manifolded) into a single, larger flowline. A generic GOSP inlet manifold may have up to 20 slots to accommodate the incoming lines. Consequently, the number of flowlines that need to be assessed will be as large or larger (due to the combined flowline sections) than the number of wells to be restored to production.

      7) For waterflood injection wells there will be an individual water injection pipeline to each well. For the purposes of assessment and repair, water injection lines are the same as flowlines. (Water injection lines have different internal corrosion failure processes than oil or gas flowlines due to differences in the fluids carried.)

c. **Tasks:**

1) **Flowline Assessment**

a) At the direction of the PCO, the assessment team will initiate an assessment process in the event area. Upon notice to proceed, assessment teams will visit pre-determined sites to assess the extent of repair, refurbishment or replacement necessary to reinstate the different facilities' flowlines.

b) A preliminary assessment of a flow line will be made by a visual inspection of the flow line from one end to the other to get a starting number and general idea of the amount of repair work needed.

c) This visual assessment has at least two limitations:

(1) Even if there are no visual indications of a leak, the line may be incapable of withstanding the pressure the well can exert on it due to corrosion or other factors.

(2) Visual assessment may identify indications of a leak that has already been repaired, or incorrectly identify which line is leaking.

2) **Damage Types and Repairs.** Types of flowline damage BRS will identify, inspect, repair and/or replace include:

a) War damage. Obvious war related damage such as damage from explosions, fires, etc.

b) Operational damage from internal and/or external corrosion. The pipeline may have been operational before hostilities but corrosion may have proceeded to a critical level during the period of inactivity. This type of damage might only be revealed by a pressure test or if a section of the line is removed to repair war damage.

c) Subcritical damage such as dents, bends, etc. Depending on the flow line wall thickness and the operating pressure, a flowline can often continue to provide satisfactory service for a period of time. Dent, kinks, and gouges introduce locations of high stress in a line. Fluctuating line pressures eventually lead to metal fatigue failures at these locations. Consequently, repairing such damage may not be a priority, but should not be indefinitely ignored.

3) **Repair / Replacement Options:** The damaged section(s) of flowlines will be removed and replaced. Small leaks will be temporarily repaired and stopped by installing a suitably designed clamp around the flow line.

Before restoring a flowline to service BRS will pressure test the flowline to 1.25 times the shut-in well head pressure. This pressure test will be done for flowlines that have been repaired and for flowlines identified as not needing repair.

4. **SERVICE SUPPORT.** See Base PLAN, ANNEX I.

5. **COMMAND AND SIGNAL.** See Base PLAN, ANNEX H.

ACKNOWLEDGE:

(b)(6)
BRS PGM, LOGCAP

OFFICIAL:
(b)(6) BRS D/PGM

TAB F (GAS OIL SEPARATION PLANTS) to APPENDIX 2 (ENGINEERING) to ANNEX F (ENGINEERING AND CONSTRUCTION) to LOGCAP CONTINGENCY SUPPORT PLAN

Time Zone Used throughout the Plan: Iraq.

Task Organization: See ANNEX A.

1. **SITUATION.**

   a. **General.** See ANNEX B and current INTSUM

   b. **Unfriendly Situation.** See Base PLAN and ANNEX B

   c. **Friendly Situation.** See Base PLAN and ANNEX B

   d. **Assumptions.** SeeBase PLAN and ANNEX F.

2. **MISSION.** BRS, on order of the PCO, conducts operations in support of assessment, engineering, construction, restoration of facilities, and resumption of crude oil production capacity to 3.1 million barrels per day (MM BPD).

3. **EXECUTION.**

   a. **Concept of the operation:**

      1) The work to reinstate Iraq's oil field production, Gas Oil Separation Plants (GOSPs), and crude oil export facilities will be completed in the shortest possible time.

      2) A 'best case' scenario will be based on repair and re-use of the existing equipment.

      3) A 'worst case' scenario will provide new equipment of adequate design capacity.

      4) BRS will receive necessary power at battery limits of each GOSP from others

   b. **Gas Oil Separation Plants (GOSP) Restoration Concept:**

      1) GOSPs which have suffered major damage will be replaced rather than repaired.

      2) Replacement GOSPs will be designed and executed on a standardized basis of 300,000, 100,000, or 25,000 BPD capacity and constructed at a "greenfield" site near existing GOSPs.

      3) Restoration of the pump stations will be a standard design to match the production/export capacity, with one or two sets of series pumps depending on the required flow rate and outlet pressure. The pump station will be constructed at a "greenfield" site near the existing pump stations.

      4) The existing oil wells related to each GOSP, are assumed restored and reused at their current reported sustainable flow rates.

5) GOSPs include booster/shipper pump trains to transfer the oil through the existing pipelines to the pump stations. Additional engineering studies may show that new larger pipelines can replace the existing pipelines and reduce the pump sizes currently assumed. This alternative probably is an economically attractive action to be studied during final engineering.

6) The associated gas from the oil fields will be recovered by repairing the existing and/or building new gas gathering and compression stations, and gas processing plants. The recovered gas will flow to the existing gas pipelines and distribution systems. Fuel gas for operating gas turbine generators or existing pump gas turbine drivers will be taken from the gas system. If the existing gas system is not availible, fuel gas will be taken directly from the high pressure GOSP separator onsite and piped untreated to the gas turbines in the area.

7) The GOSP restoration sites are detailed in **Table 1**. Repair and refurbishment will be based on the nameplate rated capacity. Replacement will be based on using the standardized design. See Attachments to this Tab for the typical GOSP design. This production capacity is based on the assumption that the crude oil wells are reused or restored as needed.

Table 1. GOSP Restoration Sites

SOUTH REGION CRUDE OIL PRODUCTION FACILITIES			
GOSP SITE	NAMEPLATE RATED CAPACITY (MM BPD)	ESTIMATED PRODUCTION CAPACITY (MM BPD)	ESTIMATED GAS PRODUCTION FROM GOSP (MILLION SQUARE CUBIC FEET PER DAY (MM SCFD))
SOUTH RUMAILAH AREA			
QURAINAT 1Q	280	173	121 TO GAS SYSTEM
SHAMIYA 2S	350	257	180 TO GAS SYSTEM
RUMAILAH SOUTH GOSP 3R	575	335	235 TO GAS SYSTEM
JANUBIA 4J	370	235	164 TO GAS SYSTEM
TOTAL SOUTH RUMAILAH		1,000	700
NORTH RUMAILAH AREA			
GOSP SITE	NAMEPLATE RATED CAPACITY (MM BPD)	ESTIMATED PRODUCTION CAPACITY (MM BPD)	ESTIMATED GAS PRODUCTION FROM GOSP (MM SCFD)
RUMAILAH NORTH GOSP 4	250	114	80 TO GAS SYSTEM
RUMAILAH NORTH CENTRAL GOSP	360	67	47 TO GAS SYSTEM
NORTH RUMAILAH GOSP # 2 AND JANUBIA SOUTH	125	64	45 TO GAS SYSTEM
NORTH SHAMIYA GOSP	120	38	26 TO GAS SYSTEM
NORTH RUMAILAH GOSP # 5	375	117	82 TO GAS SYSTEM
TOTAL NORTH RUMAILAH		400	280

Table 1. GOSP Restoration Sites continued

Az ZUBAIR AREA			
GOSP SITE	NAMEPLATE RATED CAPACITY (MM BPD)	ESTIMATED PRODUCTION CAPACITY (MM BPD)	ESTIMATED GAS PRODUCTION FROM GOSP (MM SCFD)
Az ZUBAIR GOSP CENTRAL		57	40 TO GAS SYSTEM
Az ZUBAIR GOSP #1		92	64 TO GAS SYSTEM
Az ZUBAIR GOSP #2		30	21 TO GAS SYSTEM
Az ZUBAIR GOSP #3		26	18 TO GAS SYSTEM
Az ZUBAIR GOSP #4		45	32 TO GAS SYSTEM
TOTAL Az ZUBAIR		250	175
AL LUHAYS			
GOSP SITE	NAMEPLATE RATED CAPACITY (MM BPD)	ESTIMATED PRODUCTION CAPACITY (MM BPD)	ESTIMATED GAS PRODUCTION FROM GOSP (MM SCFD)
AL LUHAYS GOSP		40	28 GAS FLARED
TOTAL PRODUCTION SOUTH OF CANAL		1690	1155 TO GAS SYSTEM 28 GAS FLARED
WEST QURNA			
GOSP SITE	NAMEPLATE RATED CAPACITY (MM BPD)	ESTIMATED PRODUCTION CAPACITY (MM BPD)	ESTIMATED GAS PRODUCTION FROM GOSP (MM SCFD)
WEST QURNA CGS-6 U/C		32	22 GAS FLARED
WEST QURNA CGS-7 U/C		111	78 GAS FLARED
WEST QURNA CGS-8 U/C		107	75 GAS FLARED
ABU GHURAH			
ABU GHURAB NORTH GOSP		15	10 GAS FLARED
ABU GHURAB SOUTH GOSP		15	10 GAS FLARED
MAJNOON			
MAJNOON GOSP		25	18 GAS FLARED
JABAL FAUQI			
JABAL FAUQI NORTH GOSP		20	14 GAS FLARED
JABAL FAUQI SOUTH GOSP		20	14 GAS FLARED
BUZURGAN			
BUZURGAN NORTH GOSP		7.5	5 GAS FLARED
BUZURGAN SOUTHERN GOSP #1		7.5	5 GAS FLARED
BUZURGAN SOUTHERN GOSP #2		7.5	5 GAS FLARED

Table 1. GOSP Restoration Sites continued

GOSP SITE	NAMEPLATE RATED CAPACITY (MM BPD)	ESTIMATED PRODUCTION CAPACITY (MM BPD)	ESTIMATED GAS PRODUCTION FROM GOSP (MM SCFD)
BUZURGAN SOUTHERN GOSP #3		7.5	5 GAS FLARED
NASIRIYAH			
NASIRIYAH GOSP		30	21 GAS FLARED
SUBBA			
SUBBA GOSP		10	7 GAS FLARED
HALFAYA			
HALFAYA GOSP		10	7 GAS FLARED
NAHR UMAR			
NAHR UMAR GOSP	50	10	7 GAS FLARED
TOTAL PRODUCTION NORTH OF CANAL		435	303 GAS FLARED
TOTAL SOUTH REGION		2125	1155 TO GAS SYSTEM 331 GAS FLARED
NORTH REGION CRUDE OIL PRODUCTION FACILITIES			
GOSP SITE	NAMEPLATE RATED CAPACITY (MM BPD)	ESTIMATED PRODUCTION CAPACITY (MM BPD)	ESTIMATED GAS PRODUCTION FROM GOSP (MM SCFD)
KIRKUK FIELD			
BABA GOSP	280	131	33 TO GAS SYSTEM
SHURAU GOSP	210	95	25 TO GAS SYSTEM
HANJIRA GOSP	190	89	22 TO GAS SYSTEM
QUTAN GOSP	125	58	14 TO GAS SYSTEM
SARALU GOSP	280	131	33 TO GAS SYSTEM
SARBASHAKAH GOSP	280	131	33 TO GAS SYSTEM
JABAL BUR	130	61	15 TO GAS SYSTEM
TOTAL KIRKUK FIELD		700	175
BAY HASAN			
GOSP SITE	NAMEPLATE RATED CAPACITY (MM BPD)	ESTIMATED PRODUCTION CAPACITY (MM BPD)	ESTIMATED GAS PRODUCTION FROM GOSP (MM SCFD)
BAY HASAN NORTH GOSP	100	40	10 TO GAS SYSTEM
BAY HASAN SOUTH GOSP	100	40	10 TO GAS SYSTEM
JAMBUR			
JAMBUR NORTH GOSP	100	5	1 TO GAS SYSTEM

GOSP SITE	NAMEPLATE RATED CAPACITY (MM BPD)	ESTIMATED PRODUCTION CAPACITY (MM BPD)	ESTIMATED GAS PRODUCTION FROM GOSP (MM SCFD)
JAMBUR SOUTH GOSP	19	15	4 TO GAS SYSTEM
KHABBAZ			
KHABBAZ GOSP		40	50 TO GAS SYSTEM
SADDAM			
SADDAM GOSP		40	20 GAS FLARED
QAIYARAH GROUP (HEAVY OIL)			
QUIYARAH GOSP		5	1 GAS FLARED
NAJMAH		5	1 GAS FLARED
JAWAN		5	1 GAS FLARED
QASAB		5	1 GAS FLARED
AYN ZALAH			
AYN ZALAH GOSP		8	2 GAS FLARED
BUTMAH GOSP		7	2 GAS FLARED
SUFAYAH			
SUFAYAH GOSP		15	4 GAS FLARED
EAST BAGHDAD			
EAST BAGHDAD		30	2 GAS FLARED
TOTAL NORTH REGION		960	250 TO GAS SYSTEM 34 GAS FLARED
TOTAL ESTIMATED PRODUCTION CAPACITY OIL (MM BPD), GAS (MM SCFD)		3085	1770
ESTIMATED GAS RECOVERY FOR EXISTING SYSTEMS (MM SCFD)			1405
ESTIMATED GAS FLARED AT GOSP SITES (MM SCFD)			365

c. **Electrical Concept**:

1) Power will be supplied to the battery limit of each GOSP by others. This power supply is critical to the overall suitability/ support of restoration at sites with moderate or partial damage. Further, preservation of the 50 Hz grid is the most efficient path toward future downstream production development and optimization initiatives.

2) To achieve "quick fix" restoration, the GOSP will be designed for the readily available large pumps and generator rentals identified by the U.S. Army Corps of Engineers (USACE). Pumping stations and GOSP units (i.e., facilities) with irreparable damage to pumps and/or their drivers will be retrofitted with 60 Hz power to exploit the immediate availability of pumps rated for operation with 60 Hz electrical power. Any existing auxiliary 50 Hz equipment which is suitable for operation at 60 Hz will be identified and

evaluated for continued service. All new equipment will be designed for satisfactory operation at 50/60 Hz.

3) In the interest of future development initiatives, any GOSP that is converted to U.S. voltages and frequency (i.e. 13.8 kV/4.16 kV/480 V, 60 Hz) for "quick fix" restoration, if economically advantageous to do so, may be restored to the site's original frequency and voltage once the local power grid is reliable.

4) Undamaged GOSPs that are considered operational will not require installation of any 60 Hz equipment and will remain on 50 Hz power supplied from the power grid. If this supply is not available or deemed unreliable, temporary 50 Hz generation will be provided.

5) The electrical design is based on the standard GOSP constructed at a "greenfield" site adjacent to each of the existing GOSP locations selected. The system is designed with redundant generation and the generator selection is based on the readily available unit identified by USACE. See Enclosures 8, 9, and 10 to this Tab. In many cases the generator selected could be oversized based on actual site loads but due to delivery time constraints these selections are best for a "quick fix" solution. These generators are, however, sufficiently sized to accommodate any known GOSP loads. The immediate availability of more-suitably sized 50 Hz equipment will be considered as an option.

6) The design, construction and installation of a new standard GOSP is based on a 60 Hz system and will be in accordance with U.S. industry standards, codes, and practices. The design will be based on the following standards: NEC, ANSI, IEEE, NEMA, and UL. Repairs or up-grades to existing GOSP where the power system is to remain at 50 Hz will be in accordance with prevailing standards, codes, and practices where applicable.

7) The design of all GOSPs are similar in respect that the electrical system is based on 4160 V generation with step-up transformers to supply power for the shipping pumps rated 13.2 kV, 3500 HP, 60 Hz, 3ph. The booster pumps and stabilizer pumps will be 4000 V, 60 Hz, 3 ph electric drives. The system voltage for low voltage motors and loads will be 480 V, 3 ph, 60 Hz.

8) The Baba GOSP and Kirkuk stabilizer facilities are considered as one plant with respect to the electrical distribution system. One central generating site and electrical power house will supply power for the GOSP, Stabilizer Train 1, and Stabilizer Train 2 located at the GOSP. All medium voltage motors will be fed from this central electrical power house. Each Stabilizer Train will have an electrical/control building located in an unclassified (non-hazardous) area adjacent to the process facility. This electrical/control building will supply power (480 V) to the process unit.

9) For the "quick fix" solution, the electrical distribution and control equipment will be installed in a pre-fabricated electrical building. This building will house the 15 kV switchgear, 4.16 kV switchgear/MCC, 480 V switchgear, low voltage MCC, UPS system, 125 VDC system, and lighting panelboards. The building will include a battery room and a control room. All equipment will be pre-installed in the building, wired and tested at the building fabricator's facility. The electrical building will include 100 percent redundant HVAC and Pressurization units. The completed building will be shipped as a package unit to the GOSP site in one or more shipping sections dimensionally designed

for air freight and arranged for easy field re-connection. The approach of a pre-fabricated building will facilitate the construction and commissioning efficiency.

10) Provision for future power grid tie-in will be accomplished by installing two future incoming breaker sections on the 15 kV switchgear. These incoming sections ultimately will be supplied grid power from 11 kV step-down transformers. See Figures 8, 9, and 10.

11) New 60 Hz transformer will be equipped with taps as required to permit 50 Hz operation at coresponding 50 Hz standard voltages (i.e. 13.8/11 kV, 4.16/3.3 kV, 480/380 V).

12) Ajustable fequency drives (AFD's) may be considered for application to large 60 Hz pumps as an option. The AFD's would allow 3500 hp, 13.2 kV, 60 Hz electric motor drivers for pipeline shipping pumps to be used on a 50 Hz power grid. The AFD would provide frequency conversion from 50 Hz to 60 Hz for the 60 Hz electric motor and would also provide a "soft start" for the 60 Hz electric motor, which would decrease the amount of generation required. The AFD could be used for flow control on the pipeline shipping pumps as well.

d. Mechanical Concept:

1) The "quick fix" phase will include inspection by qualified mechanical inspectors of designated existing facilities for damage. Damaged or destroyed equipment will be repaired as applicable.

2) Existing machinery equipment for which spare parts are not available in the market will be replaced.

3) Existing static equipment such as pressure vessels, separators, tanks, heat exchangers, filters, etc. will be inspected for damage. Damaged gaskets will be replaced.

4) All new equipment procured will be designed, fabricated, inspected and tested in complete compliance with the latest editions of all applicable industry codes and standards including API, ASME, ANSI, TEMA, NEC, NEMA, NFPA, OSHA, etc. and corresponding BRS standards and specifications.

5) Whenever possible, all major equipment will be fabricated and delivered on skids/modules with associated piping, valves, instruments, controls, wires, cables, etc. all completely pre-installed, ready for external hook-up.

e. Instrumentation Concept:

1) For the "quick fix" phase where there is intent to restore a facility, BRS will conduct a site survey. As facilities have been in operation for many years they will have a variety of instrumentation and control systems in use ranging from pneumatic self contained controllers to electronic Distributed Control Systems. Repairs will involve evaluating the health of individual devices and systems to determine if they can be returned to service or must be replaced.

a) Transmitters if found defective will be easily replaced. Pressure gauges and thermometers can be acquired in standard ranges to facilitate rapid replacement.

b) Control valves and flow elements can not be pre-ordered. They are items that have to be specified based on facility process condition. If control valves are found to be defective, manual bypass valves can be utilized until replacements can be sourced but they will require manual operator intervention. Local indicators will be required in sight of bypass valves to facilitate this control.

c) Relief valves at a minimum must be removed and tested prior to restart. As they are individually sized and will likely be from several different manufacturers it is recommended that a selection of standard sized valves with a range of orifices is acquired to facilitate rapid replacement.

d) Non electronic control systems will require eventual replacement with electronic systems as communication between GOSPs, pump stations and loading terminals is essential for proper field operations.

2) For each "greenfield" facility, a control system based on standard Industrial Control System will be utilized. This system is refered to as the Plant Control and Monitoring Systems (PCMS). The PCMS will consist of field instrumentation and computer based sub-systems (Process Automation System and Safety System).

a) The field instrumentation will be wired to local junction boxes distributed throughout the facilities. Cables from the local junction boxes will be wired to Controllers and Input/Output (I/O) Panels for the PCMS. The Process Automation System (PAS) and Safety System (SIS) controllers and I/O panels will be located in the Control room.

b) A Control Center will serve as the primary operator interface and monitoring location for each facility. The Control Center will be in a dedicated area of the Electrical Building for the facility. A PC-based computer will serve as the operator's console for the PAS and Safety System. This console will interface with the PCMS via a data highway.

c) The following design practices will be adhered to in the design of a new facility:

(1) Standard 24 VDC, 4-20 milliamp field transmitters will be utilized to monitor and control the various flow, pressure and temperature process conditions.

(2) For level measurement, the preferred technology is radar as it is immune to the effects of changes in specific gravity of measured fluids. All level control and monitoring transmitters will be mounted on flanges on the top of tanks. For floating roof type tanks, float or hydrostatic gauging system will be utilized.

(3) Use of level gauges will be minimized but armored gage glasses will be utilized if necessary.

(4) For pressure measurement, transmitters and gauges will be connected to vessels (1 ½" minimum) and piping (3/4" npt) utilizing isolation valves.

(5) Flow measurement for non custody transfer application will primarily be made with orifice meters. For custody transfer of oil, turbine meters will be utilized and for custody transfer of gas, orifice meter runs will be used. For orifice meters the preferable connection is to direct mount transmitters to minimize impulse line errors.

(6) Temperature transmitters will be direct mounted to thermowells. Elements will be 100 ohm platinum RTDs. Thermowells will be fabricated from 316 SS bar stock as a minimum, with 1 ½" flanged process connections on piping and 2" on vessels.

d) A safety system independent, stand-alone, high integrity system will be provided to implement safety related interlocks. SIS systems will be designed and programmed based on approved cause and effect charts. The cause and effect are based on the requirements of API-RP-14C and all modifications to the approved logics will require a management of change procedure. The SIS system will be selected to provide necessary reliability to bring facility to a safe condition in case of an upset.

e) In general, the trip philosophy will be to de-energize to trip (fail-safe) for process and pump trips. SIS sensors will not be used for process control, but the same sensor may be used for monitoring. All SIS main controllers will be connected to the PAS via redundant communication links to transmit alarm, status and command functions.

f. Piping Concept:

1) The "quick fix" phase will entail inspection by a certified piping inspector. Damaged piping will be repaired or replaced. Inspection, repair, testing and replacement will be per API 570 Piping Inspection code, API RP 574 Inspection practices, and ASME B31.3 Process Piping. Repair may involve cutting and re-use of existing material. Valves will be inspected for damage. Damaged valves will be replaced or repaired.

2) Gaskets on flanged connections will be inspected. Damaged gaskets will be replaced. Spare gaskets will be supplied.

3) If equipment is to be replaced due to damage and the replacement equipment is not identical, the piping connected to the equipment will not fit and will have to be revised or replaced by new piping. Certified information on new equipment will be required.

4) It is recommended that high precision surveying equipment such as HICAD (digital capture) be used to verify elevations and orientations.

5) Pipe supports will be inspected. Damaged pipe supports will be repaired or replaced. Majority of pipe supports can be field-fabricated from steel plates and structural members. Special supports such as springs will be procured.

6) For new pipe routing or for a greenfield GOSP piping, all piping will be analyzed per ASME B31.3 Process Piping Code and recommended vendor allowable loads. All piping systems will follow BRS standards and specifications for fabrication and installation.

7) All piping will be non-destructive examination (NDE) and pressure tested per the piping code before acceptance. Supply of potable water will be made available for hydrotesting. Pneumatic testing is discouraged for safety reasons.

8) All new and existing piping will have corrosion protection. Sandblasting and painting/ insulation will be per BRS standards.

g. **Facility Assessment and Restoration**: The process illustrated in **Figure 1** was used in the decision process in designing the GOSP electrical systems.

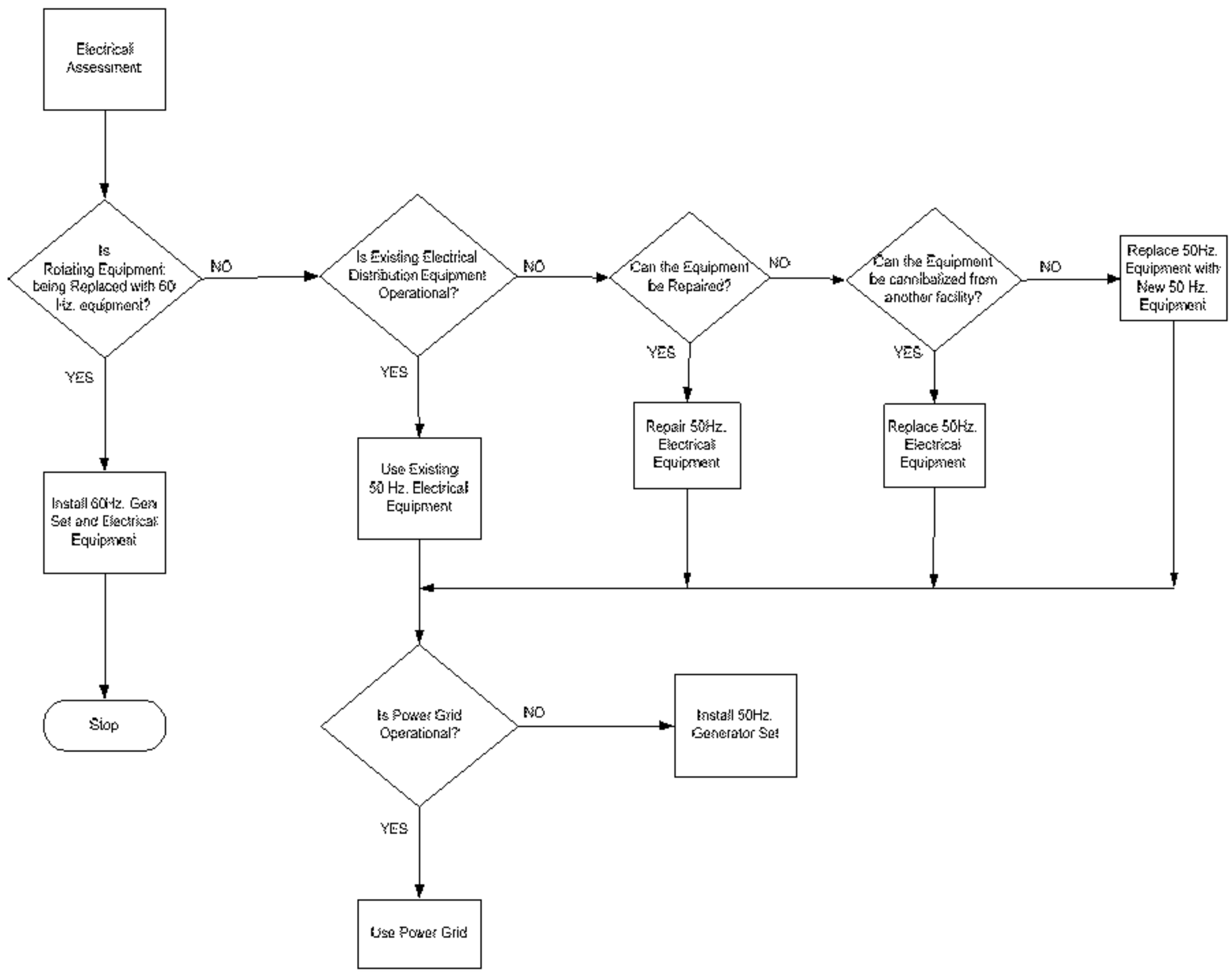

Figure 1. Facility Assessment and Restoration Decision Map Diagram

Courses of Action (COAs) for GOSP

COA 1 **(Minimal Damage)**	• See Facility Assessment and Restoration Decision Map Diagram above. • Repair existing 50 Hz Equipment, or • Replace existing equipment with new 50 Hz equipment. • Use Power Grid, or • Use 50 Hz Generator
COA 2 **(Moderate Damage)**	• See Facility Assessment and Restoration Decision Map Diagram above • Repair existing 50 Hz Equipment, or • Replace existing equipment with new 50 Hz equipment. • Use Power Grid, • Use 50 Hz Generator
COA 3 **(Major Damage)**	• See Facility Assessment and Restoration Decision Map Diagram above • Place electrical distribution equipment with new 60 Hz equipment • Use 60 Hz Generators
COA 4 **(Major Damage; Pre-pos.)**	• See Facility Assessment and Restoration Decision Map Diagram above. • Place electrical distribution equipment with new 60 Hz equipment • Use 60 Hz Generators

STANDARDIZED GOSP DESIGN: The GOSP capacities are set at 300,000, 100,000 and 25,000 BPD. This design capacity is adequate to encompass the maximum sustainable capacity (MSC) for any of the large or small existing GOSPs presented in reference documents (Drawing No. 3-F-002, "Simplified Flow Diagram, Southern Iraq"). The design is expandable by assuming an additional train would be constructed in the GOSP plot. It is assumed that the existing wells producing into an existing GOSP will function as is, be repaired and/or reinstated in order to reach the oil production stated for the restored location. The process treatment scheme is to :

- Degas the crude oil well stream to atmospheric pressure
- Treat with demulsifier chemical to remove water (Southern Area)
- Every GOSP requires dehydrator/desalter treatment equipment.
- This treatment process will produce an exportable oil product provided there are adequate flow streams from the wells.

TYPICAL PROCESS EQUIPMENT DESCRIPTION FOR STANDARD 300 MBD GOSP

INLINE DEGASSER HP SEPARATOR	14`-0" X 75`-0" T/T DP 600 PSIG, DT 200F
M P SEPARATOR	14`-0" ID X 148-0" T/T DP 275 PSIG, DT 200F,DW 300 mt
L P SEPARATOR	14`-0" ID X 148-0" T/T DP 275 PSIG, DT 200F, DW 300 mt
DEHYDRATOR/DESALTER PACKAGE (For Northern and Southern Region GOSPs)	2 VESSELS 15`-0" ID X 90-0" T/T DP/DT 200 psig/200 F, DW 100 mt

DEHYDRATOR PACKAGE INCLUDES WASHWATER TANK AND PUMPS, WASTEWATER COALESCER, FILTERS AND DISPOSAL PUMPS

BOOSTER PUMP	22,000 GPM, 40 PSI , DW 15 mt
SHIPPER PUMP	22,000 GPM, 173 PSI, DW 8 mt
AIR PACKAGE	100 SCFH, DW 2 mt
CHEMICAL INJECTION PACKAGE	0-25 GPH, DW 1 mt
FIREWATER PUMP	2500 GPM, 175 PSI, DW 2 mt
DIESEL TANK	500 BBL, DW 1 mt
SLOPS TANK	2000 BBL, DW 10 mt
SLOPS PUMP	25 GPM, 100 PSI, DW 1 mt

DW = Dry Weight,
mt= Metric Tonne

UTILITIES FOR GENERIC GOSP

The following utilities are included :

- Power Generation
- Two ground flares
- Air System
- Fire water system
- Diesel storage and transfer
- Water storage
- Chemical injection
- Slops collection system

NORTH RUMAILAH GATHERING CENTER : Oil from the North Rumailah GOSP 4, Rumailah North Central GOSP, North Rumailah GOSP #5, North Shamiya GOSP, North Rumailah GOSP #2, and Janubia South flow through their respective pipelines to the degassing boots at the stock tank located at the North Rumailah Gathering Center. A new four–mile, 42" line will be installed from the Rumailah North Central to bring its oil to the new gathering center pump station. With this larger line, pumps may not be required at the GOSP. The gas liberated in the degassing boots is flared at this site in a low pressure ground flare. The degassed oil flows into the stock tank where the booster pumps take suction and boosts the oil pressure to the suction of the shipper pumps. The oil is pumped to the Al Faw terminal.

RUMAILAH SOUTH AREA IPSA-1: A new degassing boot and stock tank will be installed at the existing IPSA -1 pump station to take the combined oil from the four GOSP locations in Rumailah south. The existing 36" line from Tubah tank farm to the IPSA-1 PS will be used to

carry the oil from the four GOSPs to the IPSA-1 boots and stock tank. A new second 36" pipeline is added to loop the existing 36" line (less than 1 mile) from the location of the existing tie-ins with the lines from GOSP 3R & GOSP 4J to the inlet manifold at IPSA-1 site. This layout eliminates the Zubair pump station(Z-1) as IPSA-1 will be able to feed oil to the IPSA 48" pipeline as well as sending oil to the pipeline down stream of the Zubair pump station(Z-1) by using the existing 48" pipeline back. The above planning is based on the assumption that the IPSA will be available for the transport of Iraqi crude oil.

GOSP PUMP STATION EQUIPMENT

Degassing boot:	Two Vertical vessels 12' by 32"
Stock Tank	23,000 bbls 60' by 46'
Booster Pump Can pump	22,000 GPM @ 40 psi
Pipeline Pump	22,000 GPM @ 173 psi
Ground flare	

NORTH REGION OIL PRODUCTION AND STABILIZATION

1. The restoration scenario for the North Region production is designated for implementation at the seven northern Fields in and around the Kirkuk area. The estimated current production level is 960,000 BPD. In contrast to the oil produced in the Rumailah field in the south, nearly all of the oil from the northern Fields is contaminated with hydrogen sulfide and must be treated, i.e. "stabilized" before refining or export. The stabilization process removes the hydrogen sulfide to a safe level of 10 ppm or less in addition to reducing the vapor pressure to the 13.0 psia general export specification.

2. The production from the GOSPs will flow to one or more stabilizer plants planned to be constructed at a "Greenfield" site near or at the existing "Crude Processing Plant No. 1".

3. The strategic distribution for the stabilized oil production includes two options :

   a. Feed all or part to the refineries at Baiji and/or Baghdad.

   b. Export all or part to the Strategic pipeline flowing south or to the I-T (Turkey) pipeline north.

4. Design of the crude oil stabilization plant :

   Standardized stabilization plants are planned, designed at a rate adequate to process the 300,000 BPD nameplate capacity for one standard GOSP. It is estimated that 3 trains of 300,000 BPD each will be required to process the current estimated production level of the northern Fields. The stabilization treatment is a heater/crude distillation tower process scheme. The equipment descriptions consist of :

   - Feed drums — 14' X 148' TT, DW 300 mt
   - DP/DT — 200 psig / 200 °F
   - feed pumps — 10,000 gpm, head 100 psi
   - feed/bottoms exchanger — 40 MM btu/hr, DP/DT 200 psig/200 °F

• stabilizer fired heater	240 MM btu/hr, 450 psig @ 650 F
• stabilizer tower	18' X 80 'TT, 25 trays, 150 psig @ 650 F, DW 175 mt
• heater circ. pumps	4,500 gpm, head 100 psi
• bottoms rundown pump	9,000 gpm, head 100 psi
• product air coolers	200 MM btu/hr, DP/DT 200 psig @ 450 °F
• storage tanks	50,000 BBL
• export booster	22,000 gpm, head 40 psi
• shipper pumps	22,000 gpm, head 173 psi

4. **SERVICE SUPPORT.** See Basic Plan, Annex I.

5. **COMMAND AND SIGNAL.** See Base Plan; Annex H.

ACKNOWLEDGE:

(b)(6)
BRS PGM, LOGCAP

OFFICIAL:
(b)(6) BRS D/PGM

ENCLOSURES

1. Southern Standard GOSP Process Flow Diagram (PFD).
2. Northern Standard GOSP Process Flow Diagram (PFD).
3. Typical GOSP Plot Plan.
4. North Rumailah Gathering Center and Pump Station.
5. Pump Station IPSA 1
6. Typical Major Pump Station
7. Stabilizer PFD
8. Electric One-Line Generic GOSP
9. Electric One-Line Baba GOSP and Kirkuk Stabilizer Plant
10. Electric One-Line Shurau GOSP
11. Typical Control System
12. Southern Region Standard GOSP 300 MBD Upgraded with Desalter System
13. Southern Region Standard GOSP 100 MBD Upgraded with Desalter System
14. Southern Region Standard GOSP 25 MBD Upgraded with Desalter System
15. Northern Region Low Pressure GOSP 300 MBD with Desalter System
16. Northern Region Low Pressure GOSP 100 MBD with Desalter System
17. Northern Region Low Pressure GOSP 25 MBD with Desalter System

ENCLOSURE 1 (FIGURE 1 SOUTHERN STANDARD GOSP) to TAB F to APPENDIX 2 to ANNEX F.

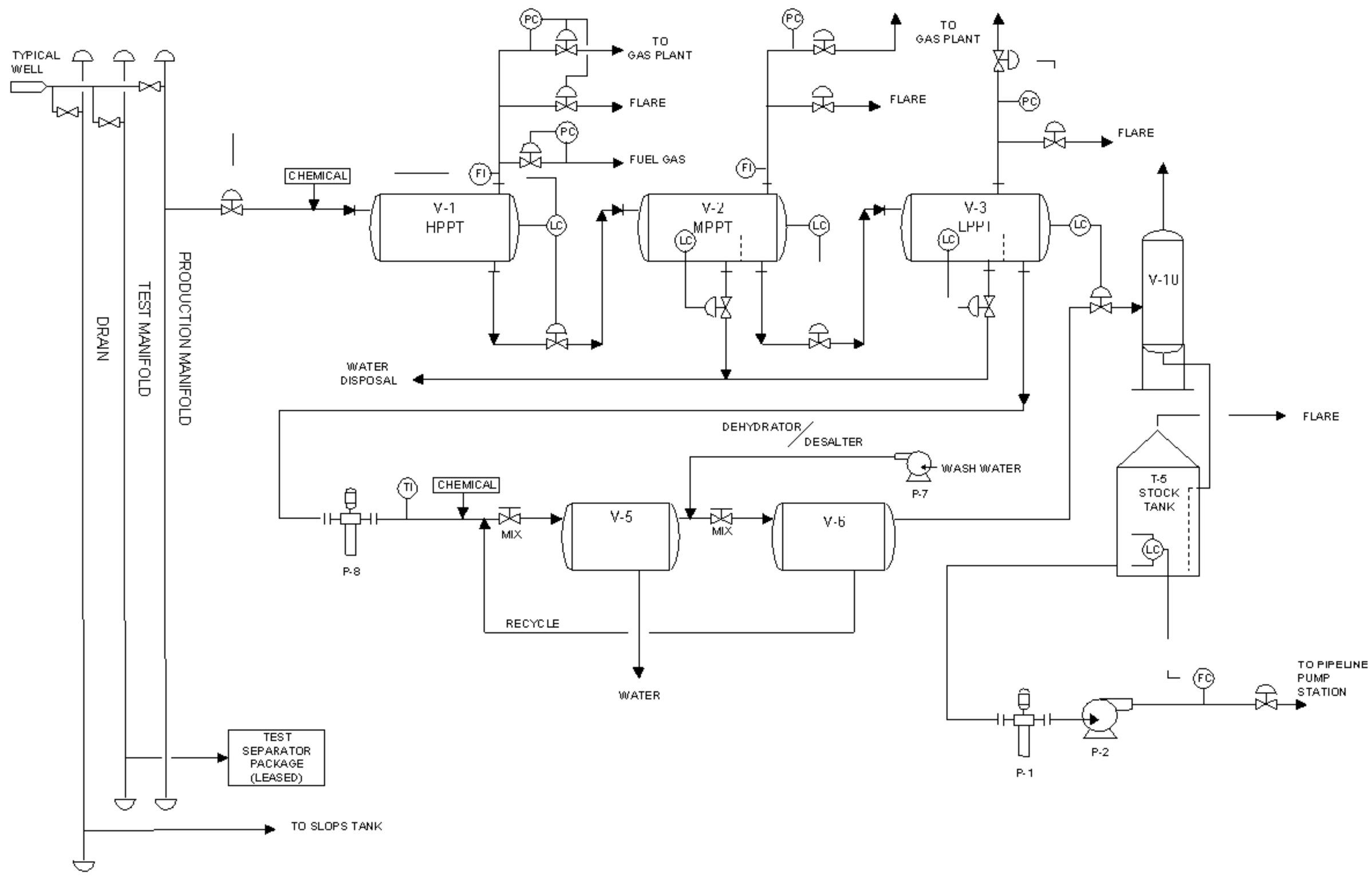

V-1	V-2	V-3	P-8	V-5	V-6	P-7	V-10	T-5	P-1	P-2
HP SEPARATOR	MP SEPARATOR	LP SEPARATOR	DESALTER FEED PUMPS	DEHYDRATOR	DESALTER	WASH WATER PUMPS	DEGASSING BOOT	STOCK TANK	BOOSTER PUMP	PIPELINE PUMP

ENCLOSURE 2 (FIGURE 2 NORTHERN STANDARD GOSP) to TAB F to APPENDIX 2 to ANNEX F.

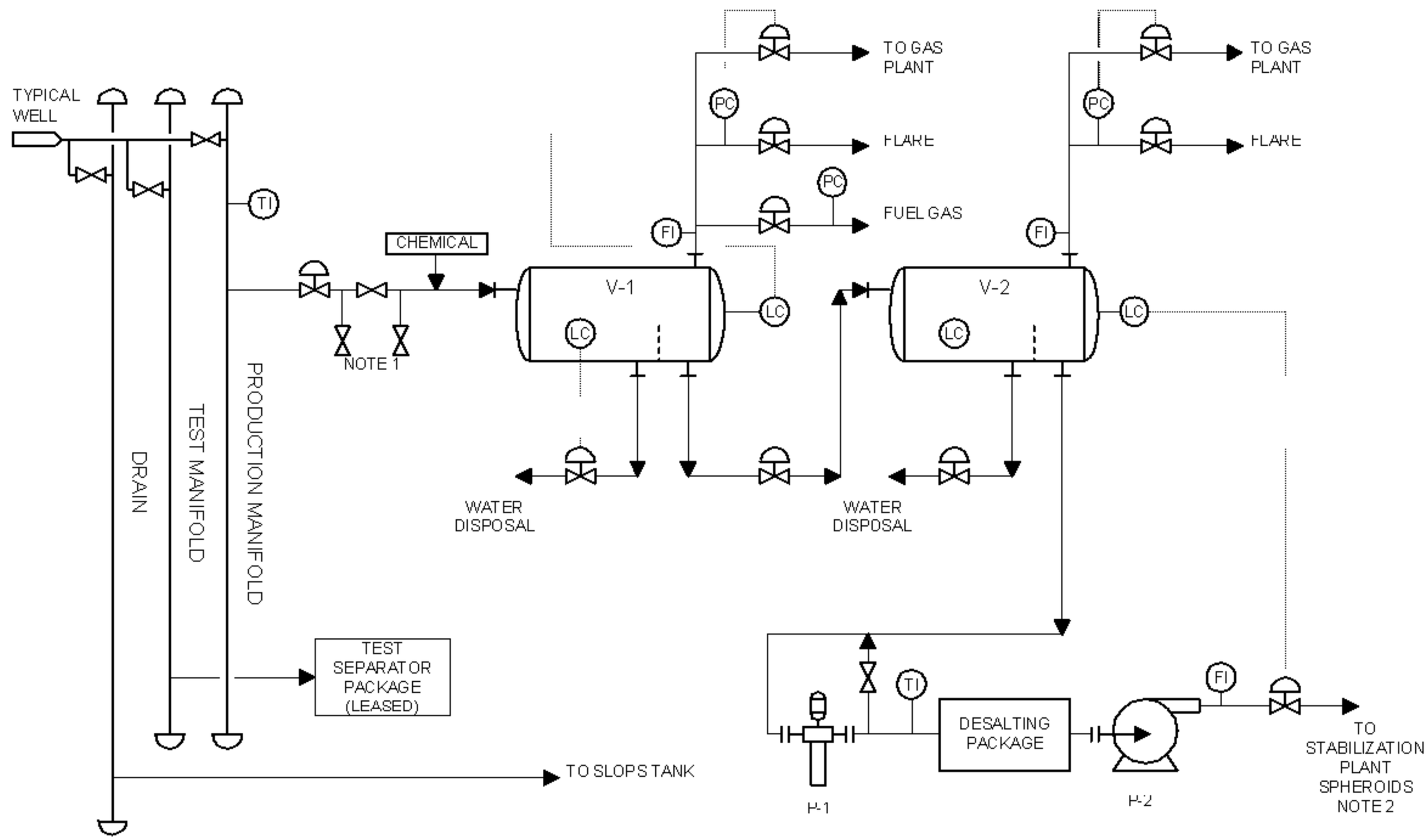

NOTES:
1. DEGASSER FUTURE
2. ASSUME ADEQUATE SPHEROIDS SURVIVE

V-1	V-2	P-1	P-2
HP SEPARATOR	MP SEPARATOR	DESALTER FEED PUMP	SHIPPER PUMP

ENCLOSURE 3 (FIGURE 3 TYPICAL GOSP PLOT PLAN) to TAB F to APPENDIX 2 to ANNEX F

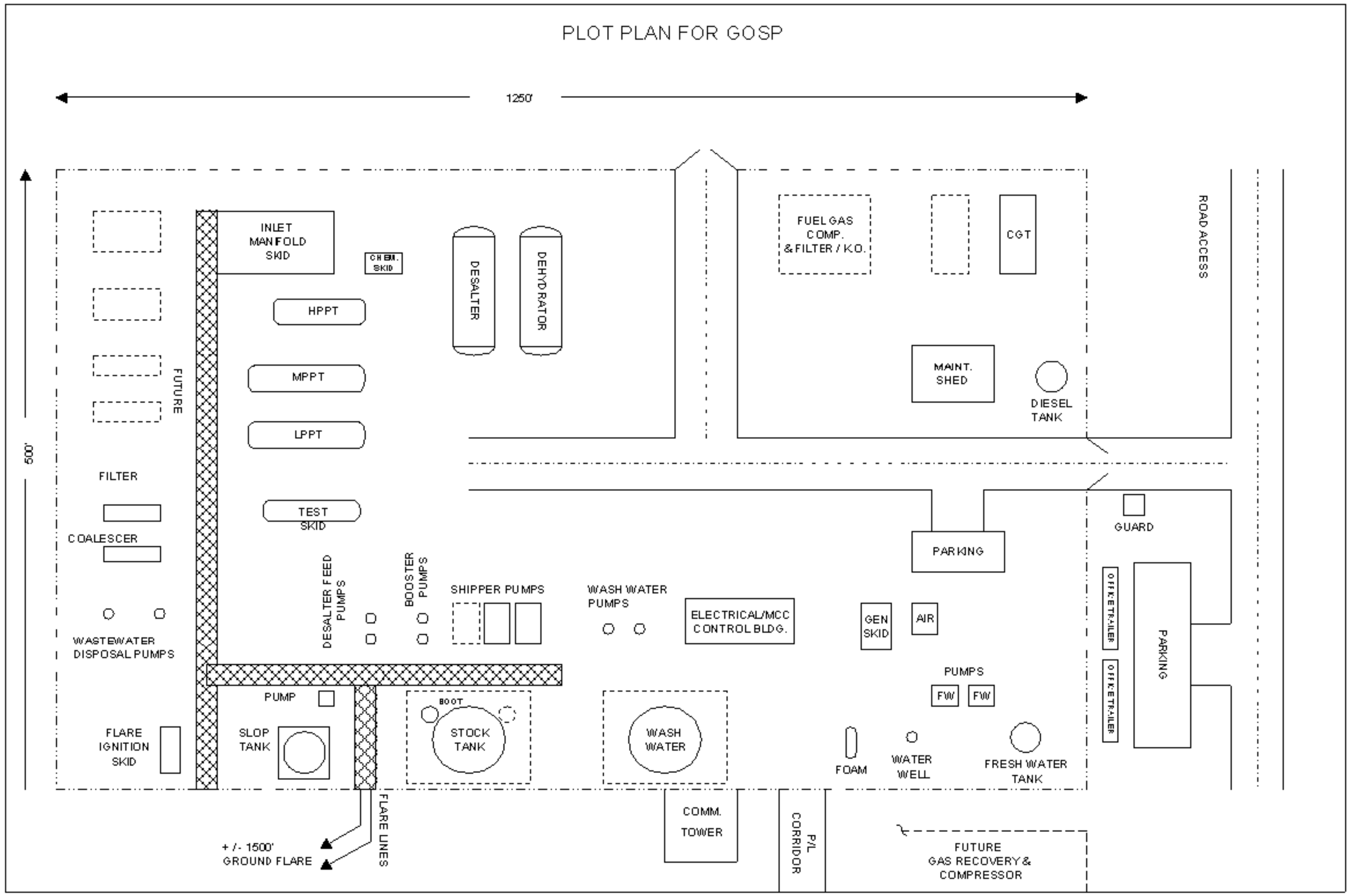

ENCLOSURE 4 (FIGURE 4 NORTH RUMAILIAH GATHERING CENTER AND PUMP STATION) to TAB F to APPENDIX 2 to ANNEX F

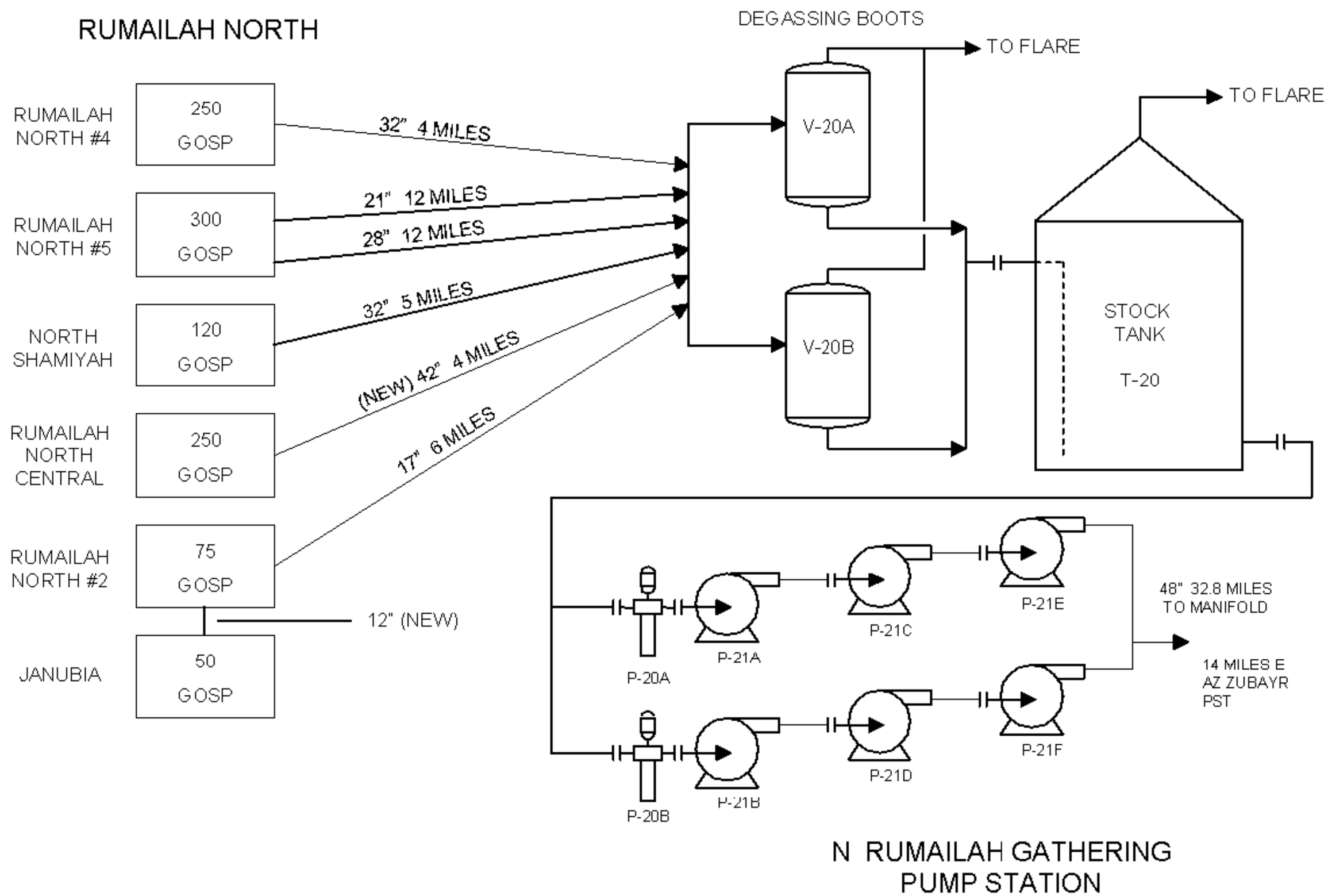

P-21A, B, C, D, E, F	P-20A & B	V-20A & B	T-20
PIPELINE PUMPS	BOOSTER PUMPS	DEGASSING BOOTS	STOCK TANK

ENCLOSURE 5 (FIGURE 5 PUMP STATION IPSA 1) to TAB F to APPENDIX 2 to ANNEX F

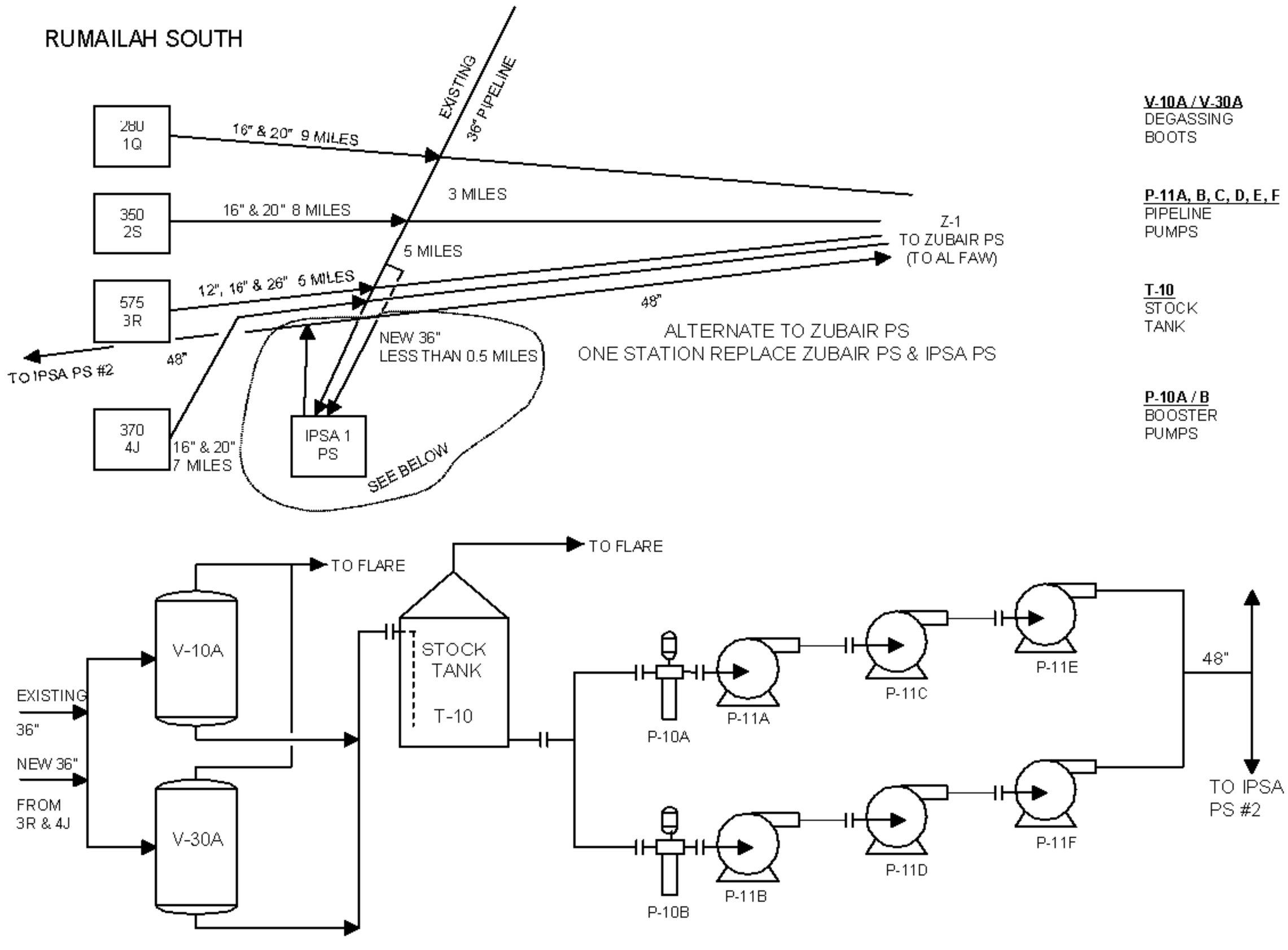

IPSA-1 PUMP STATION

TYPICAL MAJOR PUMP STATION

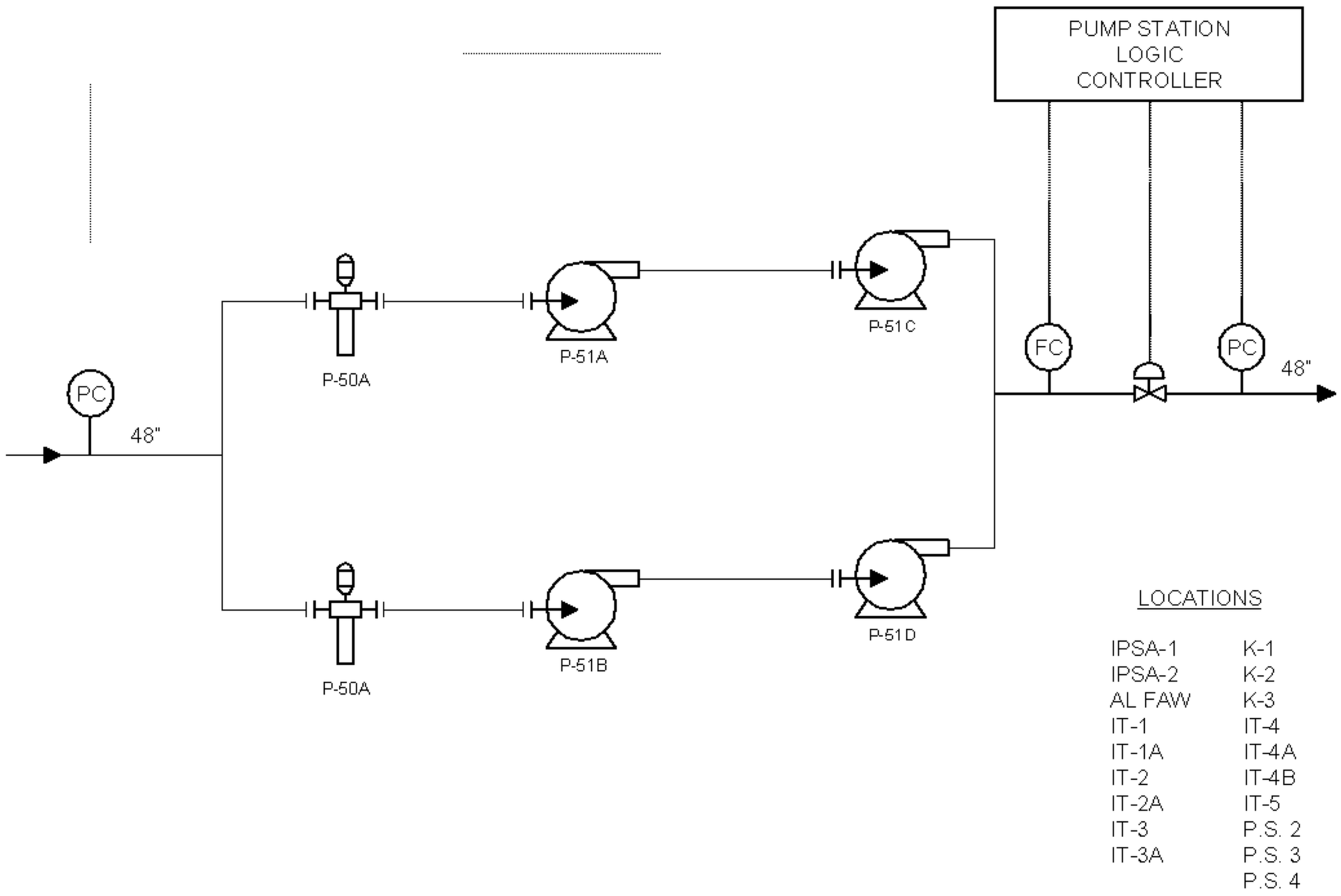

P-50A / B
BOOSTER
PUMPS

P-51A, B, C, D
PIPELINE
PUMPS

ENCLOSURE 7 (FIGURE 7 STABILIZER PFD) to TAB F to APPENDIX 2 to ANNEX F

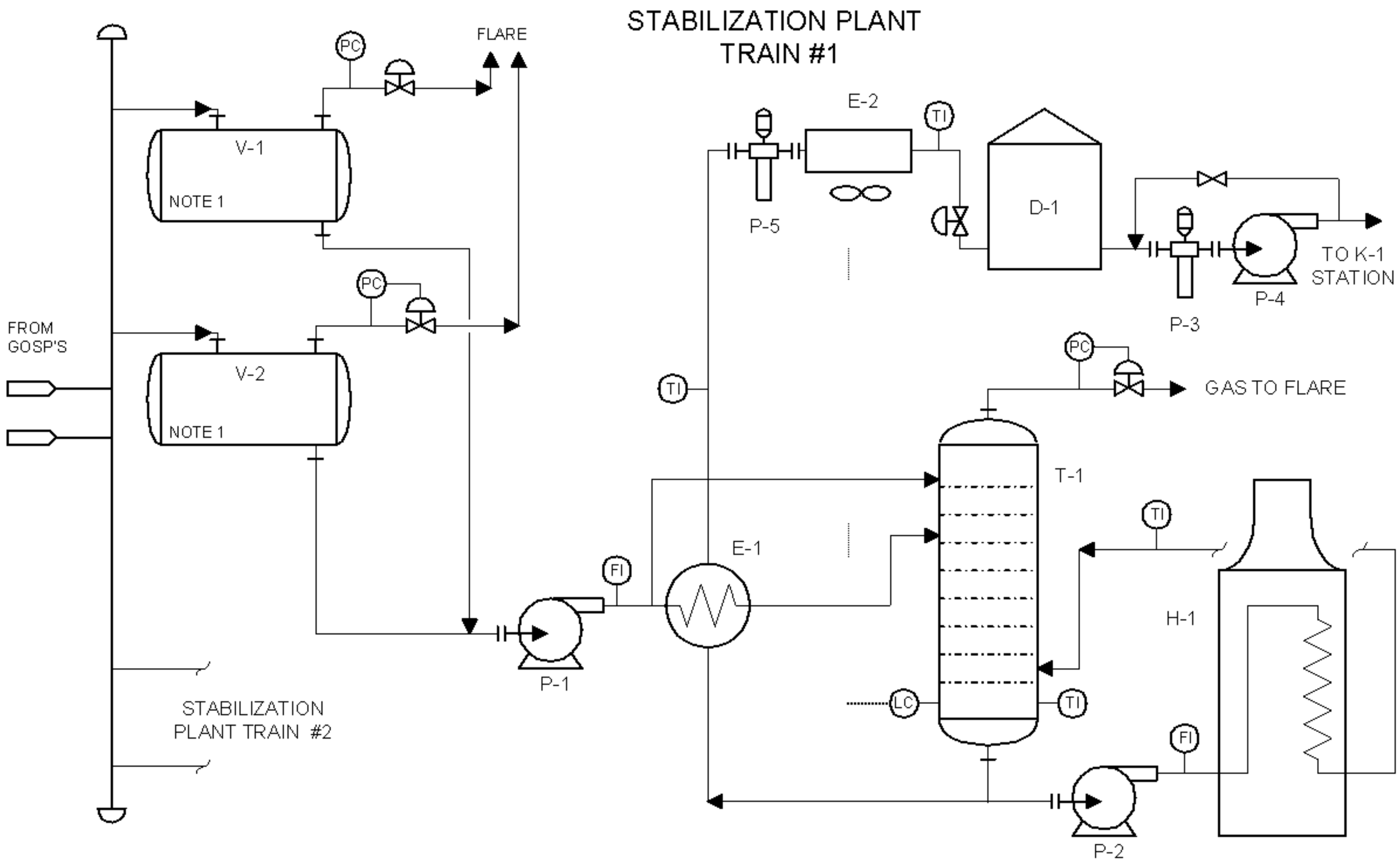

NOTE : 1. FEED DRUMS ARE REQUIRED IF EXISTING SPHEROIDS DO NOT SURVIVE.

V-1 / V-2	P-1	E-1	E-2	D-1	P-3	P-4	H-1	T-1	P-5
FEED DRUM	FEED PUMP	FEED/ BOTTOMS EXCHANGER	STABILIZER BOTTOMS AIR COOLER	STORAGE TANK	BOOSTER PUMP	SHIPPING PUMP	STABILIZER HEATER	STABILIZER	RUNDOWN PUMP

ENCLOSURE 8 (FIGURE 8 ELECTRIC ONE-LINE GOSP) to TAB F to APPENDIX 2 to ANNEX F

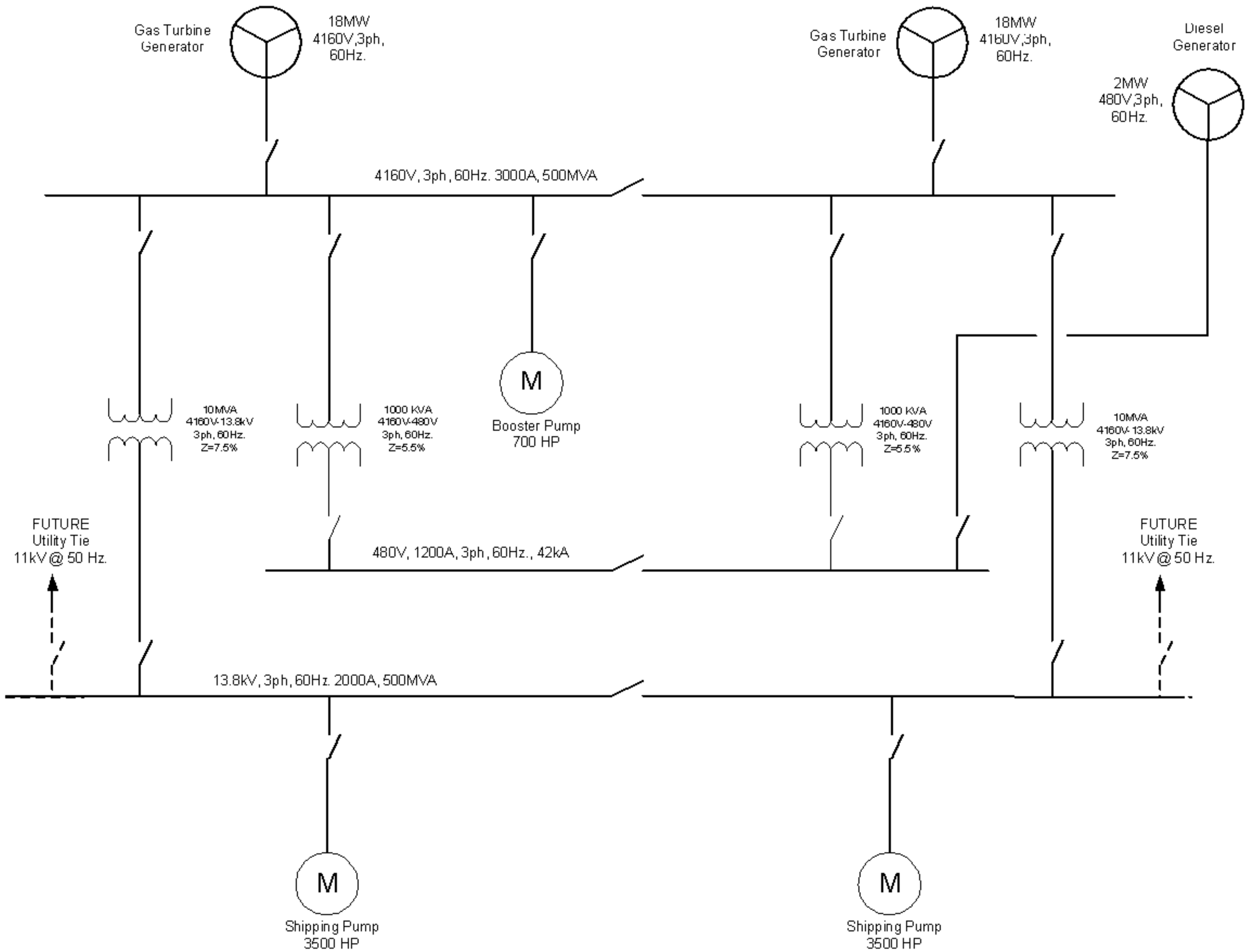

ENCLOSURE 9 (FIGURE 9 ELECTRIC ONE-LINE BABA GOSP AND KIRKUK STABILIZER PLANT) to TAB F to APPENDIX 2 to ANNEX F

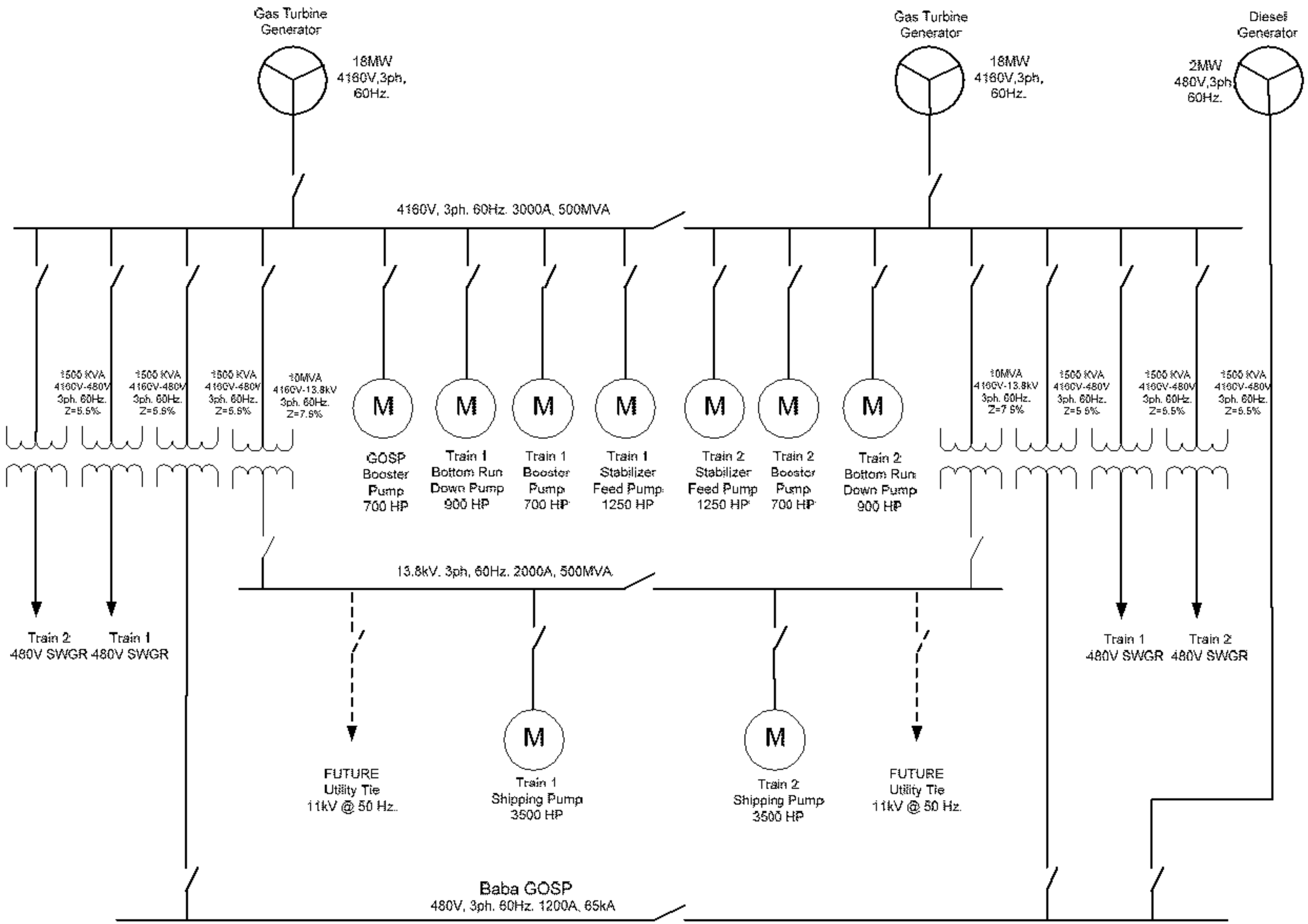

ENCLOSURE 10 (FIGURE 10 ELECTRIC ONE-LINE SHURAU GOSP) to TAB F to APPENDIX 2 to ANNEX F

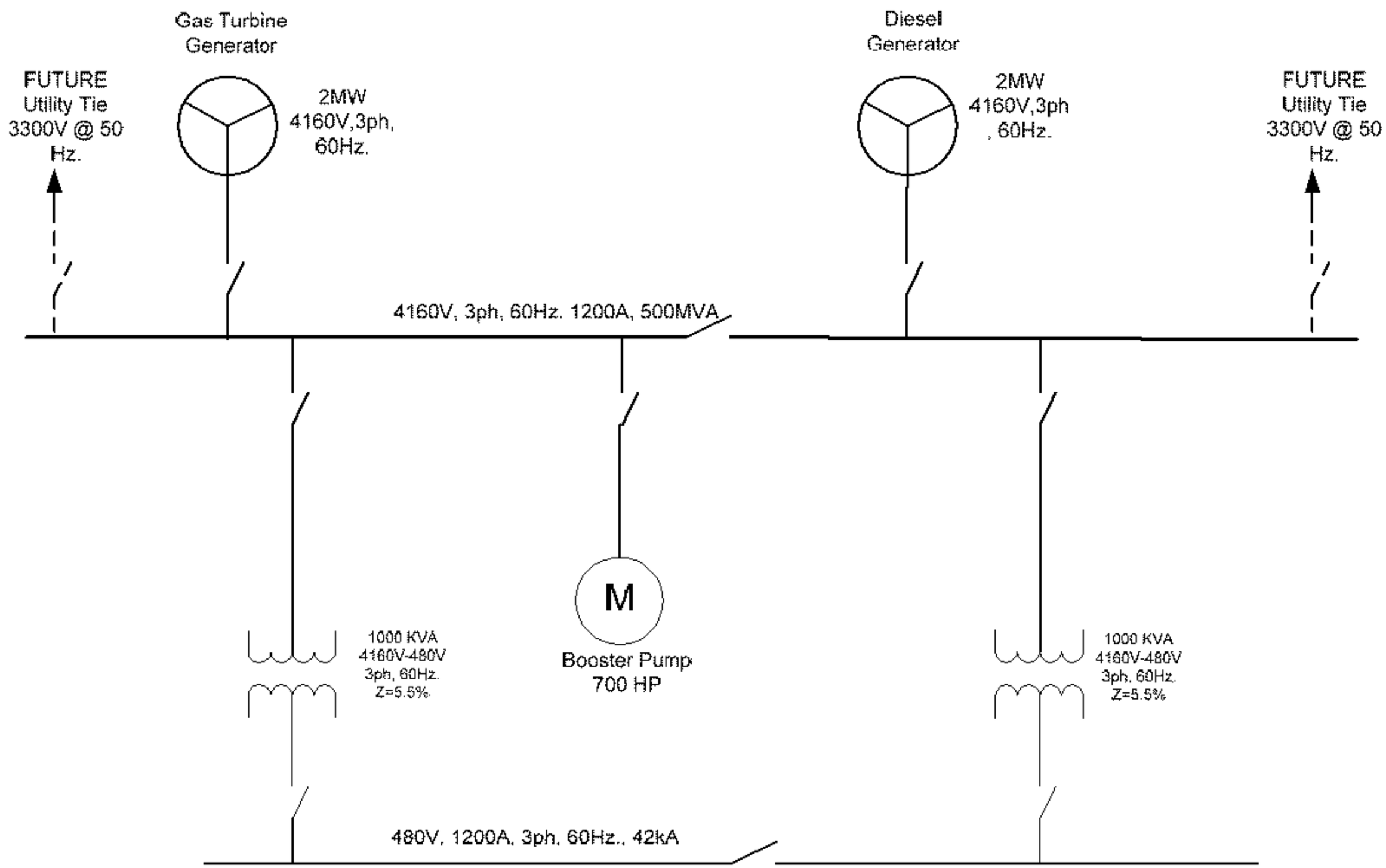

ENCLOSURE 11 (FIGURE 11 TYPICAL CONTROL SYSTEM) to TAB F to APPENDIX 2 to ANNEX F

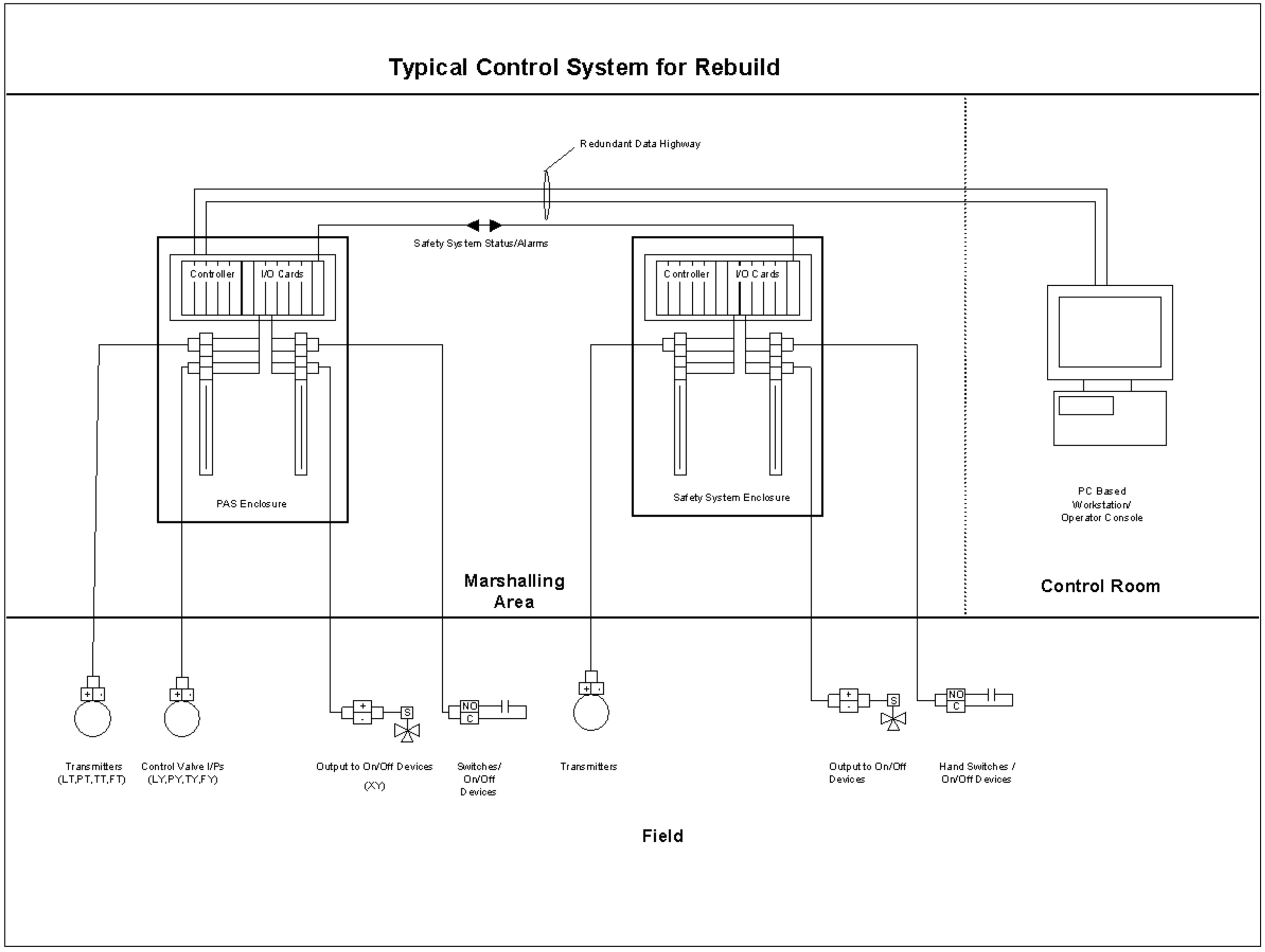

ENCLOSURE 12 (TABLE 1 SOUTHERN REGION STANDARD GOSP 300 MBD) to TAB F to APPENDIX 2 to ANNEX F

		SOUTHERN REGION STANDARD GOSP 300 MBD UPGRADED WITH DESALTER SYSTEM						
Item			SIZE	DESIGN	CAPACITY	MATERIALS	REMARKS	
X-1	TWO	INLET MANIFOLD	36"/6"/4"	600 PSIG @ 200 F	300 MBD	C STEEL		
V-1	ONE	INLINE DEGASSER HIGH PRESSURE SEPARATOR	14' X 75'	600 PSIG @ 200 F	300 MBD	C STEEL		ADDED
V-2	ONE	MP SEPARATOR	14' X 148'	275 PSIG @ 200F	300 MBD	C STEEL		RENAMED
V-3	ONE	LP SEPARATOR	14' X 148'	120 PSIG @ 200F	300 MBD	C STEEL		RENAMED
P-8	TWO	DESALTER FEED PUMPS	675 HP		11,600 GPM@75 PSI	C STEEL		ADDED
V-5	TWO	DEHYDRATOR	15' X 90'	120 PSIG @ 200F	300 MBD	C STEEL		ADDED
V-6	TWO	DESALTER	15' X 90'	120 PSIG @ 200F	300 MBD	C STEEL		ADDED
V-7	TWO	WASTE WATER COALESCER	12' X 40'	120 PSIG @ 200F	30 MBD	C STEEL		ADDED
V-8	ONE	WASTE WATER FILTER	9' X 60'	150 PSIG @ 200F	30 MBD	C STEEL		ADDED
P-6	TWO	WASTE WATER INJECTION PUMPS	300 HP		1650 GPM@225 PSI	C STEEL		ADDED
P-7	TWO	WASH WATER PUMPS	75 HP		550 GPM@175 PSI	C STEEL		ADDED
T-4	ONE	WASH WATER TANK			30,000 BBL	C STEEL		ADDED
V-4	ONE	TEST SEPARATOR	4' X 15'	1440 PSIG@ 200F	22 MBD	C STEEL		
V-10	ONE	DEGASSING BOOT	12' X 32'	120 PSIG @ 200F	300 MBD	C STEEL		REV 3
T-5	ONE	STOCK TANK	60' X 42'		20,000 BARRELS	C STEEL		ADDED
P-1	ONE	BOOSTER PUMPS	700 HP		22,000 GPM@40 PSI		OPERATING THREE	
P-2	TWO	SHIPPER PUMPS	3500 HP		22,000 GPM@173 PSI		IN SERIES.	
Z-2	ONE	AIR PACKAGE			100 SCFH @ 150 PSIG			
Z-3	ONE	CHEMICAL INJECTION PACKAGE			0 - 25 GPH		UP TO 6 CHEMICALS	
Z-4	THREE	POWER GENERATION			2.0 MW EACH			
Z-5	ONE	EMERGENCY POWER-DIESEL	0.5 MW					
T-3	ONE	FIREWATER STORAGE TANK	65' X 60'	ATM AT 140 F	30,000 BBL	C STEEL		
P-3	ONE	FIREWATER PUMP	400 HP		2500 GPM @ 175 PSI			
P-4	ONE	WELL WATER PUMP	75 HP		600 GPM @ 50PSI			CHANGED
					(500 FT WELL)			CHANGED
Z-6	ONE	FUEL GAS CONDITIONING AND						
		COMPRESSION INCLUDED IN Z-4						
Z-7	TWO	GROUND FLARES			210 MMSCFD @ 75 PSIG			
Z-8	ONE	FLARE IGNITER SKID						
T-1	ONE	SLOPS TANK	20' X 36'	ATM AT 140 F	2000 BBL	C STEEL		
P-5	ONE	SLOP PUMP	5 HP		25 GPM @ 100 PSI			
T-2	ONE	DIESEL TANK		ATM AT 140 F	500 BBL	C STEEL		
	ONE	CONTROL BUILDING						
	ONE	MAINTENANCE SHED	25' X 50'					

ENCLOSURE 13 (TABLE 2 SOUTHERN REGION STANDARD GOSP 100 MBD) to TAB F to APPENDIX 2 to ANNEX F

		SOUTHERN REGION STANDARD GOSP 100 MBD UPGRADED WITH DESALTER SYSTEM						
Item			SIZE	DESIGN	CAPACITY	MATERIALS	REMARKS	
X-1	ONE	INLET MANIFOLD	36"/6"/4"	600 PSIG @ 200 F	100 MBD	C STEEL		
V-1	ONE	INLINE DEGASSER HIGH PRESSURE SEPARATOR	10' X 50'	600 PSIG @ 200 F	100 MBD	C STEEL		NEW GOSP SIZE
V-2	ONE	MP SEPARATOR	12' X 100'	275 PSIG @ 200F	100 MBD	C STEEL		
V-3	ONE	LP SEPARATOR	12' X 100'	120 PSIG @ 200F	100 MBD	C STEEL		
P-8	TWO	DESALTER FEED PUMPS	225 HP		3870 GPM@75 PSI	C STEEL		
V-5	ONE	DEHYDRATOR	14' X 84'	120 PSIG @ 200F	100 MBD	C STEEL		
V-6	ONE	DESALTER	14' X 84'	120 PSIG @ 200F	100 MBD	C STEEL		
V-7	TWO	WASTE WATER COALESCER	7' X 40'	120 PSIG @ 200F	10 MBD	C STEEL		
V-8	ONE	WASTE WATER FILTER	6' X 60'	150 PSIG @ 200F	10 MBD	C STEEL		
P-6	TWO	WASTE WATER INJECTION PUMPS	100 HP		550 GPM@225 PSI	C STEEL		
P-7	TWO	WASH WATER PUMPS	25 HP		180 GPM@175 PSI	C STEEL		
T-4	ONE	WASH WATER TANK			10,000 BBL	C STEEL		
V-4	ONE	TEST SEPARATOR	4' X 15'	1440 PSIG@ 200F	22 MBD	C STEEL		
V-10	ONE	DEGASSING BOOT	7' X 32'	120 PSIG @ 200F	300 MBD	C STEEL		REV 3
T-5	ONE	STOCK TANK	60' X 42'		20,000 BARRELS	C STEEL		
P-1	ONE	BOOSTER PUMPS	125 HP		3,650 GPM@40 PSI		OPERATING THREE IN SERIES.	
P-2	TWO	SHIPPER PUMPS	600 HP		3,650 GPM@173 PSI			
Z-2	ONE	AIR PACKAGE			100 SCFH @ 150 PSIG			
Z-3	ONE	CHEMICAL INJECTION PACKAGE			0 - 25 GPH		UP TO 6 CHEMICALS	
Z-4	TWO	POWER GENERATION			2.0 MW EACH			
Z-5	ONE	EMERGENCY POWER-DIESEL	0.5 MW					
T-3	ONE	FIREWATER STORAGE TANK	65' X 60'	ATM AT 140 F	30,000 BBL	C STEEL		
P-3	ONE	FIREWATER PUMP	400 HP		2500 GPM @ 175 PSI			
P-4	ONE	WELL WATER PUMP	30 HP		200 GPM @ 50PSI (500 FT WELL)			
Z-6	ONE	FUEL GAS CONDITIONING AND COMPRESSION INCLUDED IN Z-4						
Z-7	TWO	GROUND FLARES			70 MMSCFD @ 75 PSIG			
Z-8	ONE	FLARE IGNITER SKID						
T-1	ONE	SLOPS TANK	20' X 36'	ATM AT 140 F	2000 BBL	C STEEL		
P-5	ONE	SLOP PUMP	5 HP		25 GPM @ 100 PSI			
T-2	ONE	DIESEL TANK		ATM AT 140 F	500 BBL	C STEEL		
	ONE	CONTROL BUILDING						
	ONE	MAINTENANCE SHED	25' X 50'					

ENCLOSURE 14 (TABLE 3 SOUTHERN REGION STANDARD GOSP 25 MBD) to TAB F to APPENDIX 2 to ANNEX F

		SOUTHERN REGION STANDARD GOSP 25 MBD UPGRADED WITH DESALTER SYSTEM						
Item			SIZE	DESIGN	CAPACITY	MATERIALS	REMARKS	
X-1	ONE	INLET MANIFOLD	18"/6"/4"	600 PSIG @ 200 F	25 MBD	C STEEL		
V-1	ONE	INLINE DEGASSER HIGH PRESSURE SEPARATOR	6.5' X 32	600 PSIG @ 200 F	25 MBD	C STEEL		NEW GOSP SIZE
V-2	ONE	MP SEPARATOR	7.5' X 65'	275 PSIG @ 200F	25 MBD	C STEEL		
V-3	ONE	LP SEPARATOR	7.5' X 65'	120 PSIG @ 200F	25 MBD	C STEEL		
P-8	TWO	DESALTER FEED PUMPS	60 HP		975 GPM@75 PSI	C STEEL		
V-5	ONE	DEHYDRATOR	7' X 42'	120 PSIG @ 200F	25 MBD	C STEEL		
V-6	ONE	DESALTER	7' X 42'	120 PSIG @ 200F	25 MBD	C STEEL		
V-7	TWO	WASTE WATER COALESCER	5' X 40'	120 PSIG @ 200F	10 MBD	C STEEL		
V-8	ONE	WASTE WATER FILTER	4' X 60'	150 PSIG @ 200F	10 MBD	C STEEL		
P-6	TWO	WASTE WATER INJECTION PUMPS	25 HP		150 GPM@225 PSI	C STEEL		
P-7	TWO	WASH WATER PUMPS	7.5 HP		50 GPM@175 PSI	C STEEL		
T-4	ONE	WASH WATER TANK			5,000 BBL	C STEEL		
V-4	ONE	TEST SEPARATOR	4' X 15'	1440 PSIG@ 200F	22 MBD	C STEEL		
V-10	ONE	DEGASSING BOOT	3.5' X 32'	120 PSIG @ 200F	300 MBD	C STEEL		REV3
T-5	ONE	STOCK TANK	60' X 42'		20,000 BARRELS	C STEEL		
P-1	ONE	BOOSTER PUMPS	35 HP		975 GPM@40 PSI		OPERATING THREE IN SERIES.	
P-2	TWO	SHIPPER PUMPS	175 HP		975 GPM@173 PSI			
Z-2	ONE	AIR PACKAGE			100 SCFH @ 150 PSIG			
Z-3	ONE	CHEMICAL INJECTION PACKAGE			0 - 25 GPH			
Z-4	TWO	POWER GENERATION			2.0 MW EACH			
Z-5	ONE	EMERGENCY POWER-DIESEL	0.5 MW					
T-3	ONE	FIREWATER STORAGE TANK	65' X 60'	ATM AT 140 F	30,000 BBL	C STEEL		
P-3	ONE	FIREWATER PUMP	400 HP		2500 GPM @ 175 PSI			
P-4	ONE	WELL WATER PUMP	10 HP		50 GPM @ 50PSI (500 FT WELL)			
Z-6	ONE	FUEL GAS CONDITIONING AND COMPRESSION INCLUDED IN Z-4						
Z-7	TWO	GROUND FLARES			20 MMSCFD @ 75 PSIG			
Z-8	ONE	FLARE IGNITER SKID						
T-1	ONE	SLOPS TANK	20' X 36'	ATM AT 140 F	2000 BBL	C STEEL		
P-5	ONE	SLOP PUMP	5 HP		25 GPM @ 100 PSI			
T-2	ONE	DIESEL TANK		ATM AT 140 F	500 BBL	C STEEL		
	ONE	CONTROL BUILDING						
	ONE	MAINTENANCE SHED	25' X 50'					

ENCLOSURE 15 (TABLE 4 NORTHERN REGION LOW PRESSURE GOSP 300 MBD) to TAB F to APPENDIX 2 to ANNEX F

	NORTHERN REGION LOW PRESSURE GOSP 300 MBD WITH DESALTER SYSTEM						
		SIZE	DESIGN	CAPACITY	MATERIALS	REMARKS	
TWO	INLET MANIFOLD	36"/6"/4"	275 PSIG @ 200 F	300 MBD	C STEEL		
ONE	MP SEPARATOR	14' X 148'	275 PSIG @ 200F	300 MBD	C STEEL		RENAMED
ONE	LP SEPARATOR	14' X 148'	120 PSIG @ 200F	300 MBD	C STEEL		RENAMED
TWO	DESALTER FEED PUMPS	675 HP		11,600 GPM@75 PSI	C STEEL		ADDED
TWO	DEHYDRATOR	15' X 90'	120 PSIG @ 200F	300 MBD	C STEEL		ADDED
TWO	DESALTER	15' X 90'	120 PSIG @ 200F	300 MBD	C STEEL		ADDED
TWO	WASTE WATER COALESCER	12' X 40'	120 PSIG @ 200F	30 MBD	C STEEL		ADDED
ONE	WASTE WATER FILTER	9' X 60'	150 PSIG @ 200F	30 MBD	C STEEL		ADDED
TWO	WASTE WATER INJECTION PUMPS	300 HP		1650 GPM@225 PSI	C STEEL		ADDED
TWO	WASH WATER PUMPS	75 HP		550 GPM@175 PSI	C STEEL		ADDED
							ADDED
ONE	WASH WATER TANK			30,000 BBL	C STEEL		ADDED
ONE	TEST SEPARATOR	4' X 15'	1440 PSIG@ 200F	22 MBD	C STEEL		
ONE	STOCK TANK	NOT REQUIRED		ASSUMED ADEQUATE	# OF SPHEROIDS AT STABILIZATION PLANTS		
ONE	BOOSTER PUMPS	700 HP		22,000 GPM@40 PSI			
ONE	AIR PACKAGE			100 SCFH @ 150 PSIG			
ONE	CHEMICAL INJECTION PACKAGE			0 - 25 GPH		UP TO 6 CHEMICALS	
TWO	POWER GENERATION-GAS			2.0 MW EACH			
ONE	EMERGENCY POWER-DIESEL	0.5 MW					
ONE	FIREWATER STORAGE TANK	65' X 60'	ATM AT 140 F	30,000 BBL	C STEEL		
ONE	FIREWATER PUMP	400 HP		2500 GPM @ 175 PSI			
ONE	WELL WATER PUMP	20 HP		100 GPM @ 50PSI (500 FT WELL)			CHANGED
ONE	FUEL GAS CONDITIONING AND COMPRESSION INCLUDED IN Z-4						
TWO	GROUND FLARES			75 MMSCFD @ 75 PSIG			
ONE	FLARE IGNITER SKID						
ONE	SLOPS TANK	20' X 36'	ATM AT 140 F	2000 BBL	C STEEL		
ONE	SLOP PUMP	5 HP		25 GPM @ 100 PSI			
ONE	DIESEL TANK		ATM AT 140 F	500 BBL	C STEEL		
ONE	CONTROL BUILDING						
ONE	MAINTENANCE SHED	25' X 50'					

ENCLOSURE 16 (TABLE 5 NORTHERN REGION LOW PRESSURE GOSP 100 MBD) to TAB F to APPENDIX 2 to ANNEX F

	NORTHERN REGION LOW PRESSURE GOSP 100 MBD WITH DESALTER SYSTEM						
		SIZE	DESIGN	CAPACITY	MATERIALS	REMARKS	
ONE	INLET MANIFOLD	36"/6"/4"	275 PSIG @ 200 F	100 MBD	C STEEL		NEW SIZE GOSP
ONE	MP SEPARATOR	12' X 100'	275 PSIG @ 200F	100 MBD	C STEEL		
ONE	LP SEPARATOR	12' X 100'	120 PSIG @ 200F	100 MBD	C STEEL		
TWO	DESALTER FEED PUMPS	225 HP		3,870 GPM@75 PSI	C STEEL		
ONE	DEHYDRATOR	14' X 84'	120 PSIG @ 200F	100 MBD	C STEEL		
ONE	DESALTER	14' X 84'	120 PSIG @ 200F	100 MBD	C STEEL		
TWO	WASTE WATER COALESCER	7' X 40'	120 PSIG @ 200F	10 MBD	C STEEL		
ONE	WASTE WATER FILTER	6' X 60'	150 PSIG @ 200F	10 MBD	C STEEL		
TWO	WASTE WATER INJECTION PUMPS	100 HP		550 GPM@225 PSI	C STEEL		
TWO	WASH WATER PUMPS	25 HP		180 GPM@175 PSI	C STEEL		
ONE	WASH WATER TANK			10,000 BBL	C STEEL		
ONE	TEST SEPARATOR	4' X 15'	1440 PSIG@ 200F	22 MBD	C STEEL		
ONE	STOCK TANK	NOT REQUIRED		ASSUMED ADEQUATE	# OF SPHEROIDS AT STABILIZATION PLANTS		
ONE	BOOSTER PUMPS	125 HP		3,650 GPM@40 PSI			
ONE	AIR PACKAGE			100 SCFH @ 150 PSIG			
ONE	CHEMICAL INJECTION PACKAGE			0 - 25 GPH		UP TO 6 CHEMICALS	
TWO	POWER GENERATION-GAS			2.0 MW EACH			
ONE	EMERGENCY POWER-DIESEL	0.5 MW					
ONE	FIREWATER STORAGE TANK	65' X 60'	ATM AT 140 F	30,000 BBL	C STEEL		
ONE	FIREWATER PUMP	400 HP		2500 GPM @ 175 PSI			
ONE	WELL WATER PUMP	30 HP		200 GPM @ 50PSI			
				(500 FT WELL)			
ONE	FUEL GAS CONDITIONING AND						
	COMPRESSION INCLUDED IN Z-4						
TWO	GROUND FLARES			25 MMSCFD @ 75 PSIG			
ONE	FLARE IGNITER SKID						
ONE	SLOPS TANK	20' X 36'	ATM AT 140 F	2000 BBL	C STEEL		
ONE	SLOP PUMP	5 HP		25 GPM @ 100 PSI			
ONE	DIESEL TANK		ATM AT 140 F	500 BBL	C STEEL		
ONE	CONTROL BUILDING						
ONE	MAINTENANCE SHED	25' X 50'					

ENCLOSURE 17 (TABLE 6 NORTHERN REGION LOW PRESSURE GOSP 25 MBD) to TAB F to APPENDIX 2 to ANNEX F

	NORTHERN REGION LOW PRESSURE GOSP 25 MBD WITH DESALTER SYSTEM						
		SIZE	DESIGN	CAPACITY	MATERIALS	REMARKS	
ONE	INLET MANIFOLD	18"/6"/4"	275 PSIG @ 200 F	25 MBD	C STEEL		NEW GOSP SIZE
ONE	MP SEPARATOR	7.5' X 65'	275 PSIG @ 200F	25 MBD	C STEEL		
ONE	LP SEPARATOR	7.5' X 65'	120 PSIG @ 200F	25 MBD	C STEEL		
TWO	DESALTER FEED PUMPS	60 HP		975 GPM@75 PSI	C STEEL		
ONE	DEHYDRATOR	7' X 42'	120 PSIG @ 200F	25 MBD	C STEEL		
ONE	DESALTER	7' X 42'	120 PSIG @ 200F	25 MBD	C STEEL		
TWO	WASTE WATER COALESCER	5' X 40'	120 PSIG @ 200F	10 MBD	C STEEL		
ONE	WASTE WATER FILTER	6' X 60'	150 PSIG @ 200F	10 MBD	C STEEL		
TWO	WASTE WATER INJECTION PUMPS	25 HP		150 GPM@225 PSI	C STEEL		
TWO	WASH WATER PUMPS	7.5 HP		50 GPM@175 PSI	C STEEL		
ONE	WASH WATER TANK			5,000 BBL	C STEEL		
ONE	TEST SEPARATOR	4' X 15'	1440 PSIG@ 200F	22 MBD	C STEEL		
ONE	STOCK TANK	NOT REQUIRED		ASSUMED ADEQUATE	# OF SPHEROIDS AT STABILIZATION PLANTS		
ONE	BOOSTER PUMPS	35 HP		975 GPM@40 PSI			
ONE	AIR PACKAGE			100 SCFH @ 150 PSIG			
ONE	CHEMICAL INJECTION PACKAGE			0 - 25 GPH		UP TO 6 CHEMICALS	
ONE	POWER GENERATION-GAS			2.0 MW EACH			
ONE	EMERGENCY POWER-DIESEL	0.5 MW					
ONE	FIREWATER STORAGE TANK	65' X 60'	ATM AT 140 F	30,000 BBL	C STEEL		
ONE	FIREWATER PUMP	400 HP		2500 GPM @ 175 PSI			
ONE	WELL WATER PUMP	10 HP		50 GPM @ 50PSI (500 FT WELL)			
ONE	FUEL GAS CONDITIONING AND COMPRESSION INCLUDED IN Z-4						
TWO	GROUND FLARES			6 MMSCFD @ 75 PSIG			
ONE	FLARE IGNITER SKID						
ONE	SLOPS TANK	20' X 36'	ATM AT 140 F	2000 BBL	C STEEL		
ONE	SLOP PUMP	5 HP		25 GPM @ 100 PSI			
ONE	DIESEL TANK		ATM AT 140 F	500 BBL	C STEEL		
ONE	CONTROL BUILDING						
ONE	MAINTENANCE SHED	25' X 50'					

TAB G (GAS HANDLING) to APPENDIX 2 (ENGINEERING) to ANNEX F (ENGINEERING AND CONSTRUCTION) to LOGCAP CONTINGENCY SUPPORT PLAN

Time Zone Used throughout the Plan: Time zone will be that of the EVENT country.

Task Organization: See ANNEX A.

1. SITUATION.

   a. **General. See ANNEX B and current INTSUM**

   b. **Unfriendly Situation.** See Base PLAN and ANNEX B

   c. **Friendly Situation.** See Base PLAN and ANNEX B

   d. **Assumptions.** See basic plan

2. **MISSION.** BRS, on order of the PCO, conducts operations in support of assessment, engineering, construction, restoration of facilities and resumption of the recovery of natural gas and natural gas liquids (NGL) associated with crude oil production in Iraq.

3. **EXECUTION.**

   a. **Concept of the operation:**

      1) The work to reinstate Iraq's natural gas production, field compressor station and dehydrators gas gathering lines, gas treating plants, gas processing plants, gas transmission pipelines, NGL fractionation facilities, NGL storage facilities, and NGL export facilities will be completed in the shortest possible time.
      2) A 'best case' scenario will be based on repair and reuse of the existing equipment.
      3) A 'worst case' scenario will provide new equipment of similar or larger design.
      4) The first phase is to achieve an initial "quick fix" which rapidly installs facilities that supply gas directly to the gas turbines in the area.
      5) Second phase is to bring the associated gas production capacity from the GOSPs in the Rumailah and Az Zubair fields in the south up to 1,160 million standard cubic feet per day (MM SCFD) and from the GOSPs in the Kirkuk, Bay Hasan, Jambur, and Khabbaz fields in the north up to 250 MM SCFD providing a total of raw gas of 1,400 MM SCFD for the country.
      6) Third phase is to bring the production capacity for the gas treating plants and gas processing plants in the Kirkuk area up to the raw gas supply volumes in its area and the gas processing plants in the Az Zubair/Rumailah area up to its raw gas supply volumes in its area.

   b. **Gas Handling Restoration Concept:**

      1) Design and capacity rates based on assumed typical gas oil ratios and gas compositions.

      2) The associated gas is collected by the gas gathering pipeline system from the GOSP's compressor/ dehydration stations and delivered to the gas processing plants in the south

or gas treaters/ processing plant in the north. The low pressure gas from the GOSP is compressed and joins the high pressure gas from the GOSP where it is dehydrated and delivered to the gas gathering system.

3) The processed gas (residue gas) from the processing plants is delivered to the gas transmission pipelines for delivery to the end users (gas turbine driven pump stations, gas turbine driven compressors and power plants). The residue gas from the processing plants could supply up to 3,500 MW of power generation, if all of the residue gas was available for power generation.

4) The listed GOSPs are assumed to be the only GOSPs connected to an existing gathering system. It is also assumed that the non listed GOSPs are flaring their associated gas at site.

5) Gas handling equipment which has suffered major damage will be replaced.

6) Replacement field compressors and dehydration stations will be designed and executed on a generic equipment and compressor size, constructed at a "greenfield" site near existing sites.

7) The gas gathering pipelines between the field compressor stations and the gas treating and process plants will be repaired.

8) Restoration of the treating plants (H_2S removal) at Kirkuk will include repair of usable equipment and replacement of non-repairable equipment with standard generic units based on the required capacity and operating pressure. If required, new treating plants will be constructed at a "greenfield" site near the existing plant.

9) Restoration of the sulfur recovery plant at Kirkuk will include repair of usable equipment and replacement of non-repairable equipment with standard generic units based on the required capacity and operating pressure. If required, new sulfur plants will be constructed at a "greenfield" site near the existing plant.

10) Restoration of the processing plants at Rumailah, Az Zubair, and Kirkuk will include repair of usable equipment and replacement of non-repairable equipment with standard generic units based on the required capacity, operating pressure and feed gas quality. If required, new processing plants will be constructed at a "greenfield" site near the existing plants.

11) Restoration of the Az Zubair LPG fractionation plant and the Khor Az Zubair refrigerated LPG storage site & terminal will include repair of usable equipment and replacement of non-repairable equipment with standard generic units based on the required capacity. If required, new facilities will be constructed at a "greenfield" site near the existing facilities.

12) The gas transmission pipelines from the gas processing plant to the power plants and other gas consumers will be repaired.

13) Replacement gas transmission compressor stations will be designed and executed on a generic equipment and compressor size, constructed at a "greenfield" site near existing sites.

14) The associated gas from the GOSPs will be handled by the existing (repaired) and/or new gas gathering pipelines, compression stations, and gas processing plants. The associated gas will flow to the gas processing/treating plants. From these plants, the processed gas will flow to the existing gas pipeline (repaired) and gas distribution system for delivery to the end users. Fuel gas for operating gas turbines generators or existing gas turbine driven pumps will be taken from the existing gas distribution system. If the existing gas system is not available, fuel gas will be taken directly from the GOSP high pressure separator on site and piped untreated to the gas turbines in the area.

15) The associated gas from the GOSP that can not be processed by the gas handling system will be flared at the GOSPs. It is expected that the GOSPs will be restored to capacity earlier than the gas handling system will be restored to its capacity, and during this time period flaring of the associated gas will take place at the GOSP.

c. Electrical Concept:

1) Power at at 50 Hz will be provided by others.

d. Mechanical Concept:

1) The "quick fix" phase will include inspection by qualified mechanical inspectors of designated existing facilities for damage. Damaged or destroyed equipment will be repaired or replaced as applicable.

2) Assessment Teams will identify and replace spare parts for existing machinery equipment as required.

3) Existing static equipment such as pressure vessels, separators, tanks, heat exchangers, filters, etc. will be inspected for damage. Damaged gaskets will be replaced.

4) All new equipment procured will be designed, fabricated, inspected and tested in complete compliance with the latest editions of all applicable industry codes and standards including API, ASME, ANSI, TEMA, NEC, NEMA, NFPA, OSHA, etc. and corresponding BRS standards and specifications.

5) Whenever possible, all major equipment will be fabricated and delivered on skids/modules with associated piping, valves, instruments, controls, wires, cables, etc. all completely pre-installed, ready for external hook-up.

e. Instrumentation Concept:

1) The "quick fix" phase will include inspection by qualified mechanical inspectors of designated existing facilities for damage. Damaged or destroyed equipment will be repaired or replaced as applicable.

2) For the "quick fix" phase where there is intent to restore a facility, a site survey will be required. As facilities have been in operation for many years, they will have a variety of instrumentation and control systems in use ranging from pneumatic self contained controllers to electronic Distributed Control Systems. Repairs will involve evaluating the condition of individual devices and systems to determine if they can be returned to service or must be replaced.

   Transmitters if found defective will be easily replaced. Pressure gauges and thermometers can be acquired in standard ranges to facilitate rapid replacement.

   Control valves and flow elements can not be pre-ordered. These are items that have to be specified based on facility process conditions. If control valves are found to be defective, manual bypass valves can be utilized until replacements can be sourced, but they will require manual operator intervention. Local indicators will be required in sight of bypass valves to facilitate this control.

   Relief valves as a minimum must be removed and tested prior to restart. As these are individually sized and will likely be from several different manufacturers, it is recommended that a selection of standard sized valves with a range of orifices is acquired to facilitate rapid replacement.

   Non electronic control systems will require eventual replacement with electronic systems as communication between GOSPs, Pump stations and Unloading terminals is essential for proper field operations.

3) For each "greenfield" facility, a control system based on standard Industrial Control System will be utilized. This system is refered to as the Plant Control and Monitoring Systems (PCMS). The PCMS will consist of field instrumentation and computer based sub-systems (Process Automation System and Safety System).

   The field instrumentation will be wired to local junction boxes distributed throughout the facilities. Cables from the local junction boxes will be wired to Controllers and Input/Output (I/O) Panels for the PCMS. The Process Automation System (PAS) and Safety System (SIS) controllers and I/O panels will be located in the Control room.

   A Control Center will serve as the primary operator interface and monitoring location for each facility. The Control Center will be in a dedicated area of the Electrical Building for the facility. A PC-based desktop computer will serve as the operator's console for the PAS and Safety System. This console will interface with the PCMS via a data highway.

   The following design practices will be adhered to in the design of a new facility:

   a) Standard 24 VDC, 4-20 milliamp field transmitters will be utilized to monitor and control the various flow, pressure and temperature process conditions.

   b) For level measurement, the preferred technology is radar as it is immune to the effects of changes in specific gravity of measured fluids. All level control and monitoring transmitters will be mounted on flanges on the top of tanks. For floating roof type tanks, float or hydrostatic gauging system will be utilized.

c) Use of level gauges will be minimized but armored gage glasses will be utilized if necessary.

d) For pressure measurement transmitters and gauges will be connected to vessels (1 ½" minimum) and piping (3/4" NPT) utilizing isolation valves.

e) Flow measurement for non custody transfer application will primarily be made with orifice meters. For custody transfer of LPGs, turbine meters will be utilized and for custody transfer of gas, orifice meter runs will be used. For orifice meters, the preferable connection is to direct mount transmitters to minimize impulse line errors.

f) Temperature transmitters will be direct mounted to thermowells. Elements will be 100 ohm platinum RTDs. Thermowells will be fabricated from 316 SS bar stock as a minimum, with 1 ½" flanged process connections on piping and 2" on vessels.

A safety system independent, stand-alone, high integrity system will be provided to implement safety related interlocks. SIS systems will be designed and programmed based on approved cause and effect charts. The cause and effects are based on the requirements of API-RP-14C and all modifications to the approved logics will require a management of change procedure. The SIS system will be selected to provide necessary reliability to bring facility to a safe condition in case of an upset.

In general, the trip philosophy will be de-energized to trip (fail-safe) for process and pump trips. SIS sensors will not be used for process control, but the same sensor may be used for monitoring. All SIS main controllers will be connected to the PAS via redundant communication links to transmit alarm, status and command functions.

f. Piping Concept:

1) The "quick fix" phase will entail inspection by a certified piping inspector. Damaged piping will be repaired or replaced. Inspection, repair, testing and replacement will be per API 570 Piping Inspection code, API RP 574 Inspection practices, and ASME B31.3 Process Piping. Repair may involve cutting and re-use of existing material. Damaged valves will be replaced or repaired.

2) Gaskets on flanged connections will be inspected. Damaged gaskets will be replaced.

3) If equipment is to be replaced due to damage and the replacement equipment is not identical, the piping connected to the equipment will not fit and will have to be revised or replaced by new piping. Certified information on new equipment will be required.

4) It is recommended that high precision surveying equipment such as HICAD (digital capture) be used to verify elevations and orientations.

5) Pipe supports will be inspected. Damaged pipe supports will be repaired or replaced. Majority of pipe supports can be field fabricated from steel plates and structural members. Special supports such as springs will be procured.

6) For new pipe routing or for a greenfield GOSP piping, all piping will be analyzed per ASME B31.3 Process Piping Code and recommended vendor allowable loads. All piping systems will follow BRS standards and specifications for fabrication and installation.

7) All piping will be Non-Destructive Examination (NDE) and pressure tested per the piping code before acceptance. Supply of potable water will be made available for hydrotesting. Pneumatic testing is discouraged for safety reasons.

8) All new and existing piping will have corrosion protection. Sandblasting and painting/ insulation will be per BRS standards.

g. **Facility Assessment and Restoration :**

Figure 1 illustrates in the decision process used in designing the gas handling electrical systems.

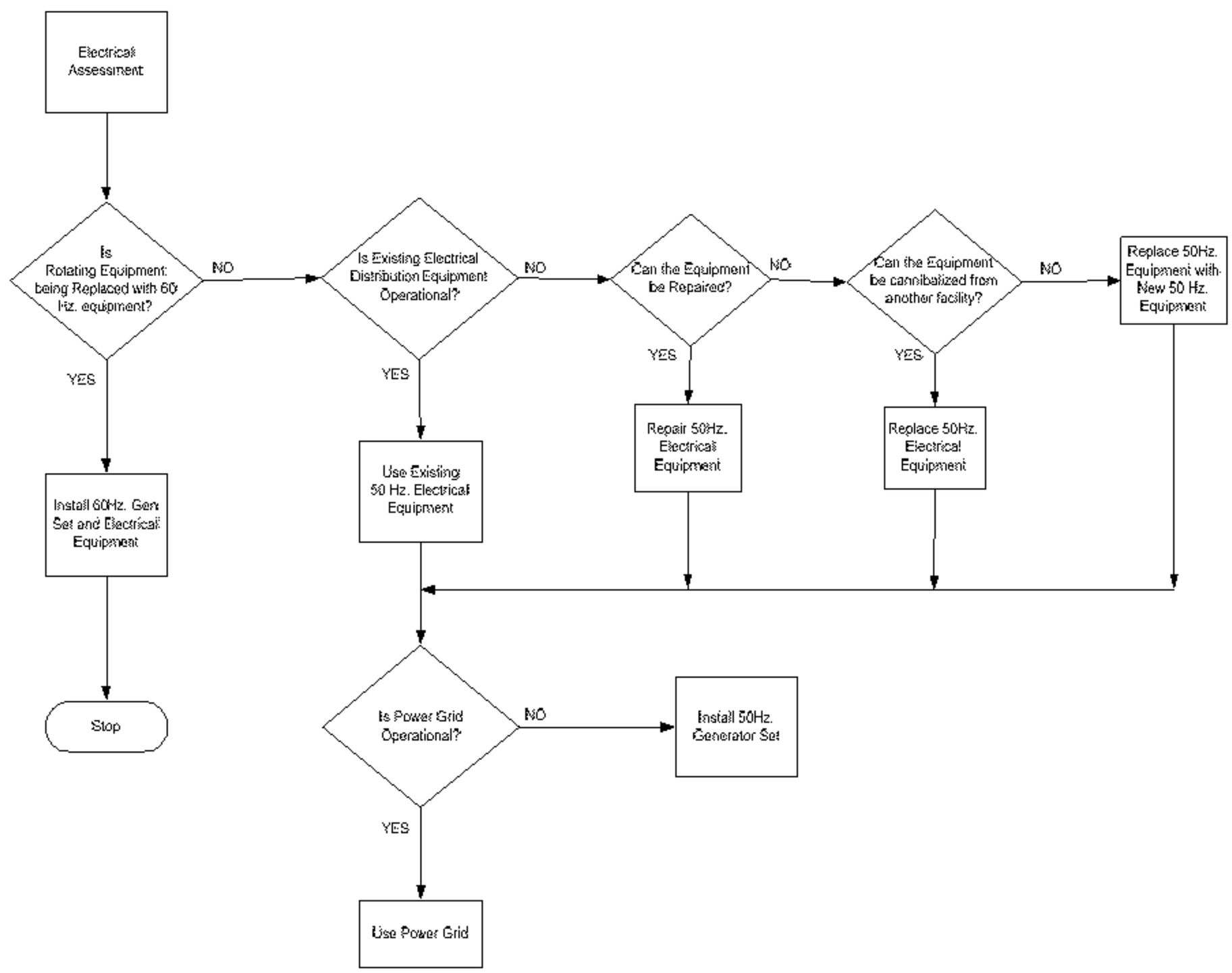

Figure 1. Facility Assessment and Restoration Decision Map Diagram

Courses of Action (COAs) for Gas Handling

COA 1 (Best Case)	• See Figure 1. • Repair existing 50 Hz. Equipment, or • Replace existing equipment with new 50 Hz. equipment. • Use Power Grid, or • Use 50 Hz. Generator
COA 2 (Most Probable)	• See Figure 1. • Repair existing 50 Hz. Equipment, or • Replace existing equipment with new 50 Hz. equipment. • Use Power Grid, • Use 50 Hz. Generator
COA 3 (Worst Case)	• See Figure 1. • Place electrical distribution equipment with new 60 Hz. equipment • Use 60 Hz. Generators
COA 4 (Worse Case; Pre-pos.)	• See Figure 1. • Place electrical distribution equipment with new 60 Hz. equipment • Use 60 Hz. Generators

4. **SERVICE SUPPORT.** See Basic Plan, Annex I

5. **COMMAND AND SIGNAL.** See the Base Plan and Annex H.

ACKNOWLEDGE:

(b)(6)
BRS PGM, LOGCAP

OFFICIAL:
(b)(6) BRS D/PGM

ENCLOSURES:

1. Typical Compressor Station at Rumailah
2. South Region Gas System
3. Typical Compressor Station in North Region
4. North Region Gas System

ENCLOSURE 1 (TYPICAL COMPRESSOR STATION AT RUMAILAH) to TAB G to APPENDIX 2 to ANNEX F.

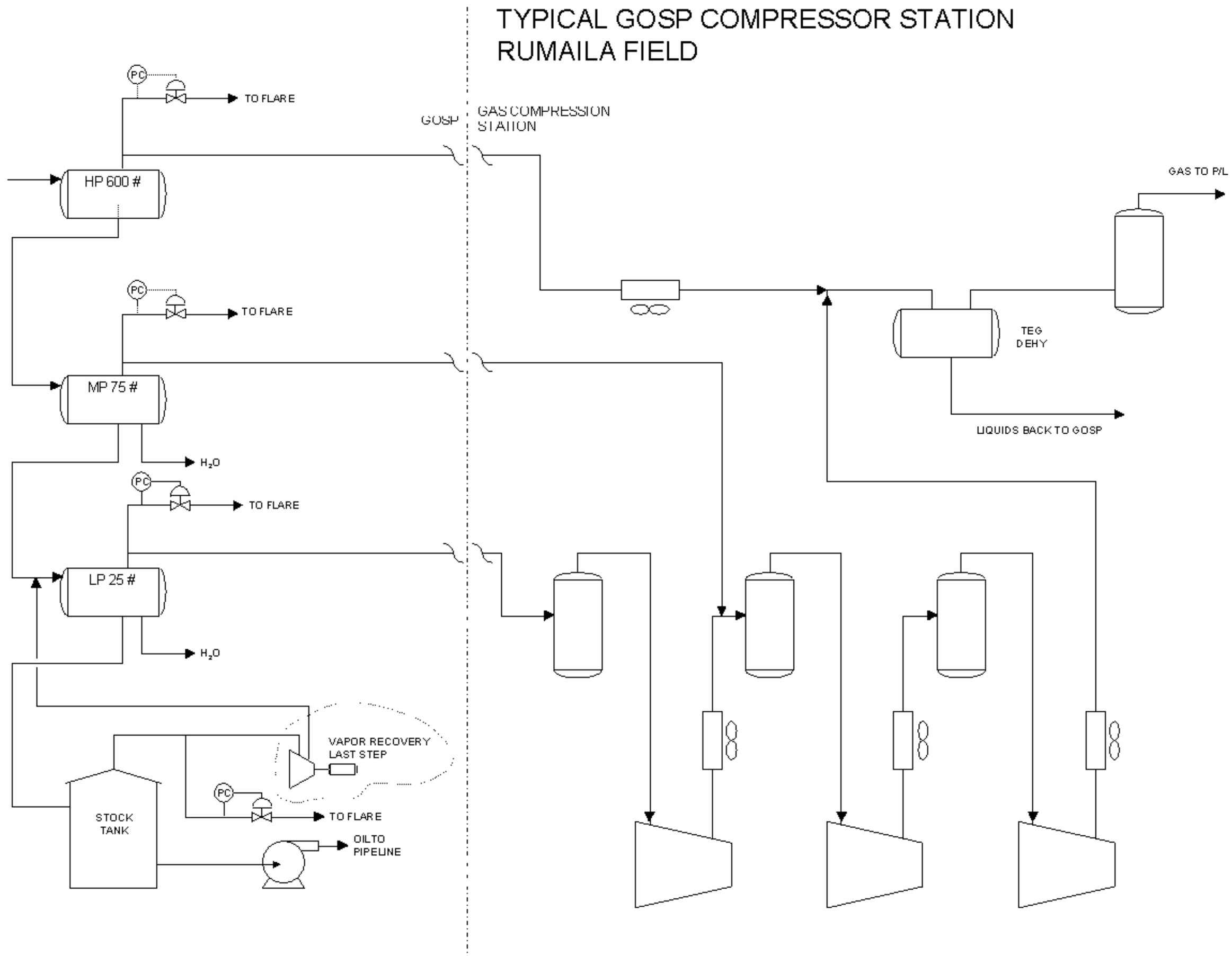

ENCLOSURE 2 (SOUTH REGION GAS SYSTEM) to TAB G to APPENDIX 2 to ANNEX F.

GAS PROCESSING PLANTS SOUTH REGION

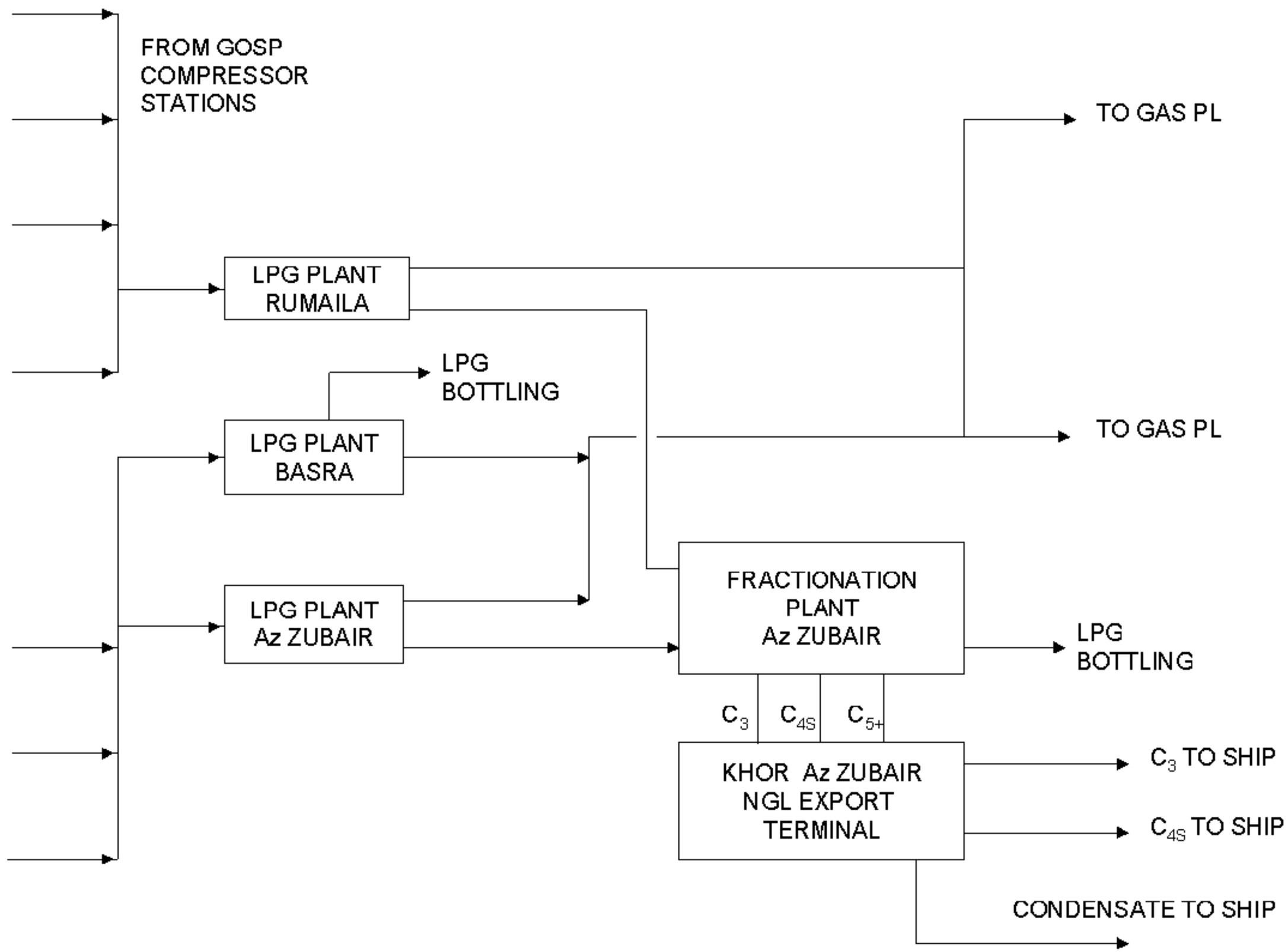

ENCLOSURE 3 (TYPICAL COMPRESSOR STATION IN NORTH REGION) to TAB G to APPENDIX 2 to ANNEX F

TYPICAL GAS HANDLING IN NORTH REGION

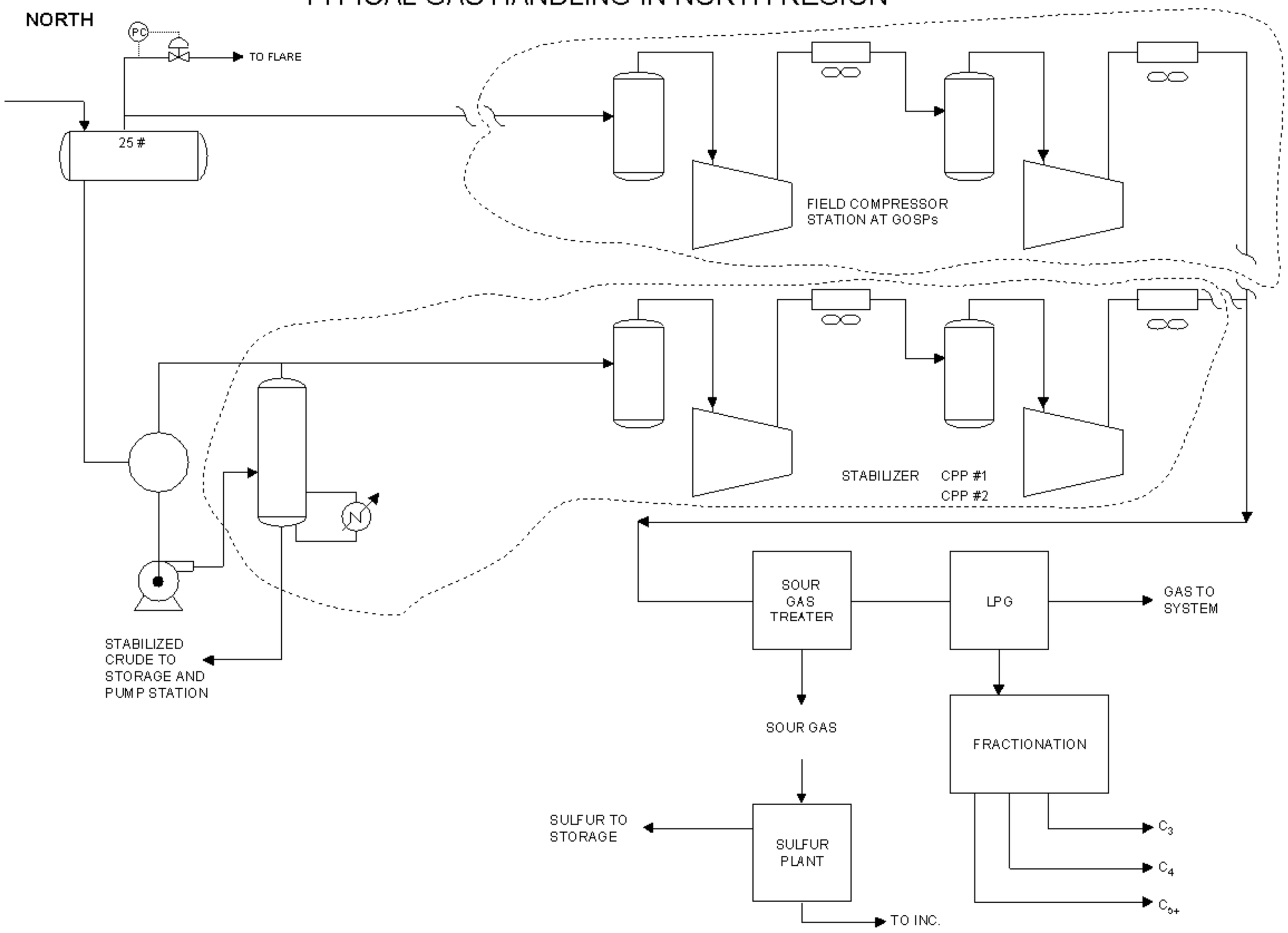

NORTH GAS SYSTEM

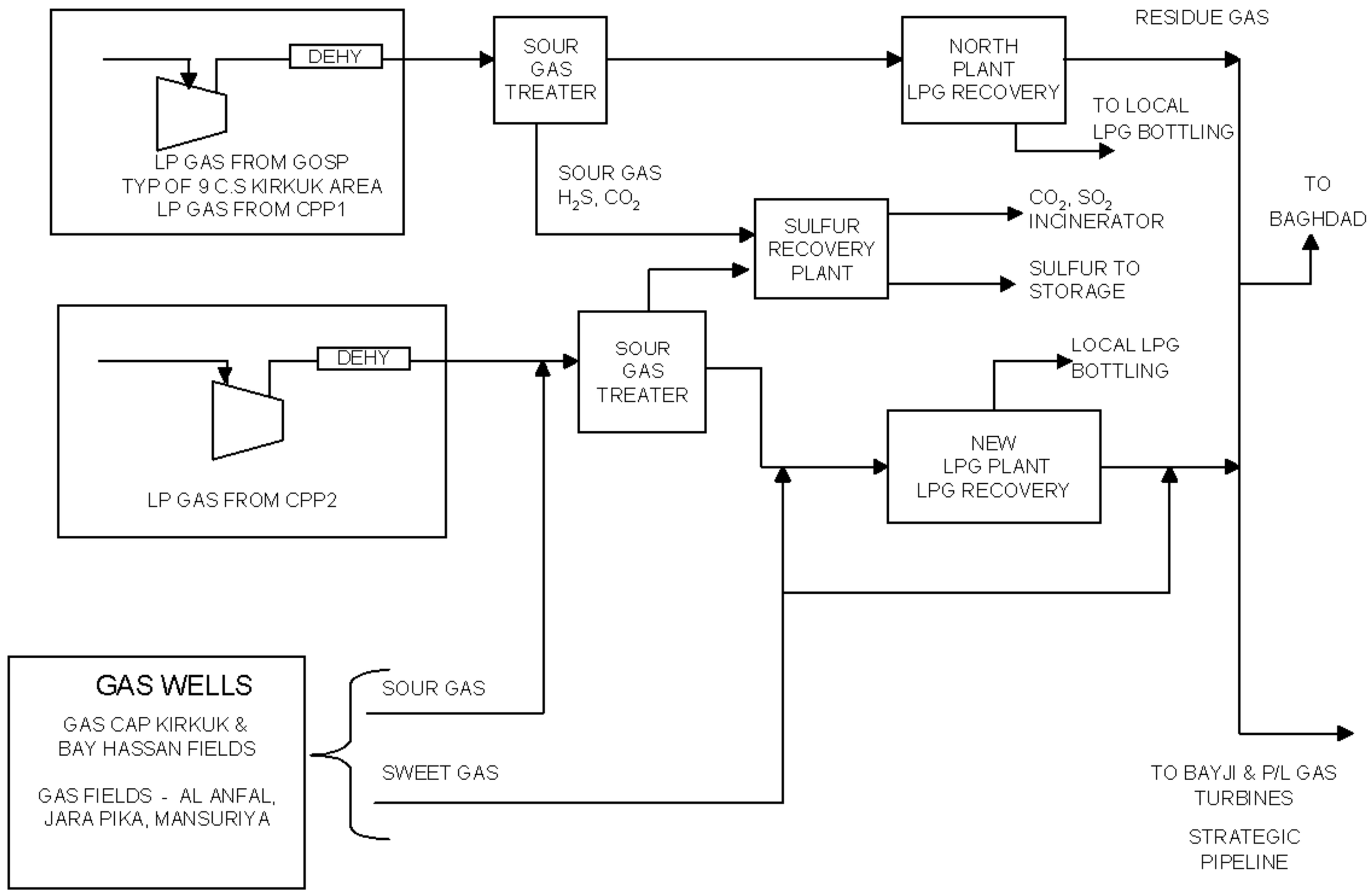

TAB H (PIPELINES & PUMP STATIONS) to APPENDIX 2 (ENGINEERING) to ANNEX F (CONSTRUCTION & ENGINEERING) to LOGCAP CONTINGENCY SUPPORT PLAN

REFERENCES. See ANNEX N, Appendix 4.

TIME ZONE USED THROUGHOUT THE PLAN. Iraq.

TASK ORGANIZATION. See ANNEX A.

1. SITUATION. See Base PLAN.

2. MISSION. See Base PLAN.

3. EXECUTION. See Base PLAN.

a. Concept of Operations. Pipelines, pump stations, and electrical systems are to be repaired or replaced to support the export objective. Transmission pipelines carry the fluids, crude oil in this case, from one plant to another. Plant in this context should be understood to mean GOSP, gathering station, stabilization plant, pump station, tank farm, terminal, or other type of facility. The common design and operating standard for this type of crude oil pipeline is ASME B31.4, Pipeline Transportation Systems for Liquid Hydrocarbons and Other Liquids. Pipelines in Iraq may have been designed to this or similar standards. (The piping within plants that connects to transmission pipelines is commonly designed to ASME B31.3, Process Piping.)

The scope of this Tab includes the crude oil pipelines within Iraq that have been identified as serving Iraq's crude oil export pipelines AND export pipelines to Saudi Arabia, Turkey, and Syria. Export pipelines serving the terminals in the Persian Gulf are discussed in Tab G of this Appendix. Much of the information presented below about the sizes and lengths of the pipelines was taken from the client drawings Simplified Flow Diagram Northern Iraq, 15 Mar 85, Drawing Number 3-F-001, and Simplified Flow Diagram Southern Iraq, 18 Mar 85, Drawing Number 3-F-002.

The scope of pipeline assessment and repair/restoration also includes certain gas pipelines that serve gas processing plants which supply national power grid gas turbine powered electrical stations. These stations and the associated plants and gas pipelines (and possibly compressor stations) remain to be identified. The common design and operating standard for gas pipelines is ASME B31.8, Gas Transmission and Distribution Piping Systems. Furthermore, certain pipeline pump stations such as those on the North-South Strategic Pipeline are driven by gas turbine powered pumps. In so far as the gas turbine pump drivers are undamaged, the gas supply pipeline system and gas facitilies (processing plants and compressors) will need to be restored. (If a turbine is damaged, the "quick fix" replacement is an electrical motor as subsequently discussed.) The potential scope of the work to restore gas pipelines and facilities has not been assessed.

1) Pipelines within Iraq. Pipelines within Iraq can be grouped into three areas: the South Area, the North Area, and the North-South strategic pipeline. The pipelines within each of these areas are briefly described in the following paragraphs.

(a) South Area Pipelines. There are two somewhat separate pipeline systems in the South Area. The first of these was designed to serve the Mina al Bakr export terminal in the Persian

Gulf. **Table 1** (next page) illustrates the pipelines feeding the Al Faw South tank farm and pumping station which pumps oil to the Mina al Bakr export terminal. **Table 1** is ordered from the destination, Al Faw South, back toward the source gas oil separators.

	Destination	Origin	Diameter	Length	
			inches	mi	km
1	Al Faw South	Rumailah Central GOSP	28	83.88	134.99
2	Al Faw South	Rumailah Gathering Sta.	48	82.02	132.00
3	*Al Faw South*	*Buzurgan Pet. Complex*	*28*	*180.21*	*290.02*
4	Rumailah Central GOSP	N. Shamiya GOSP	17	4.04	6.50
5	Rumailah Central GOSP	S. Janubia GOSP	15	5.59	9.00
6	Rumailah Central GOSP	Rumailah Gath. Sta.	28		
7	Rumailah Gath. Sta.	N. Rumailah GOSP 2	17	4.97	8.00
8	Rumailah Gath. Sta.	N. Rumailah GOSP 3	21	3.11	5.01
9	Rumailah Gath. Sta.	N. Rumailah GOSP 4	32	4.35	7.00
10	Rumailah Gath. Sta.	N. Rumailah GOSP 5	21	9.94	16.00
11	Rumailah Gath. Sta.	N. Rumailah GOSP 5	28	9.94	16.00
12	Rumailah Gath. Sta.	Lunais GOSP	12	35.42	57.00
13	Al Faw-Rumailah G. S. Pipeline	Nahr Umr GOSP	14	24.2	38.95
			Total	447.	720.

Table 1. Al Faw South System

Table 1 includes a 180-mile, 28" pipeline from the Buzurgan Petroleum Complex, which is near the border with Iran. Omitting this pipeline reduces the total mileage to 267 miles.

Table 2 presents the pipelines feeding the Al Faw North pumping station which pumps oil to the Khor al Amaya export terminal. Table 2 is ordered from the destination, Al Faw North back toward the source gas oil separators.

	Destination	Origin	Diameter	Length	
			inches	mi	km
1	Al Faw North	Zubair P.S.	24	65	105.
2	Al Faw North	Zubair P.S.	30/32	65	105.
3	Al Faw North	Zubair P.S. - Part 1	30	32.5	52.
4	Al Faw North	Zubair P.S. - Part 2	32	33	53.
5	Zubair P.S.	Qurainat GOSP	16	19	31.
6	Zubair P.S.	Qurainat GOSP	20	19	31.
7	Zubair P.S.	Shamiya GOSP	16	19	31.
8	Zubair P.S.	Shamiya GOSP	20	19	31.
9	Zubair P.S.	Rumailah GOSP	12	19	31.
10	Zubair P.S.	Rumailah GOSP	16	19	31.
11	Zubair P.S.	Rumailah GOSP	26	19	31.
12	Zubair P.S.	Janubia GOSP	16	19	31.
13	Zubair GOSP/Zubair P.S.	Janubia GOSP	20	19	31.
14	Zubair P.S.	Hammar GOSP	12	9.32	15.0
15	Zubair P.S.	Qasr GOSP			
			Total	376.	605.

Table 2. Al Faw North System

The Qasr GOSP is shown on some references as sending its crude to the Az Zubair pump station but the length and size of the pipeline are not known.

It seems likely that these two systems in the South Area have been interconnected, but it is not understood how or if this has been done. It would be relatively simple to interconnect the systems at Al Faw.

This list of pipelines is incomplete. It is based on information provided to date by the client. However, oil fields and GOSPs are known for which we do not have connecting pipeline information. Typically these are GOSPs in fields that are being developed. In the South Area pipeline information is lacking for pipelines from the GOSPs in the following fields: West Quna, Nasiriyah, Majnoon, Jabal Fauqi, Abu Ghurab, Subba, and Halfaya. Even within fields there may be additional pipelines between GOSPs and the central pumping station. For example, Buzurgan has four GOSPs one of which includes a pump station and pipeline to Al Faw (see Table 1). So, there must be three other pipelines, probably not too large or long, connecting Buzurgan GOSPs to the Buzurgan pump station and pipeline.

A CIA map (Iraq's Petroleum and Gas Infrastructure, 760681AI 8-02) shows some of the pipelines and allows the following rough estimates of pipeline length: West Quna - 30 km, Majnoon - nil, Jabal Fauqi - 20 km, Abu Ghurab - 25 km, Subba - nil, and Halfaya - nil, where "nil" indicates the field is adjacent to a major pipeline. These fields represent about 20 percent of the production capacity in the South Area, with West Quna, by far the most significant, representing about 12 percent.

b) North Area Pipelines. The North Area has a single pipeline system. Initially this system provided exports by means of the Mediterranean Pipeline System through Syria. Currently it also provides exports to the Iraq-Turkey pipeline system. **Table 3** represents the pipelines feeding the Kirkuk Central Processing 2 which pumps oil to the Iraq-Turkey Pipeline. The table is ordered from the destination, Kirkuk C.P. 2, back to the source gas oil separators.

	Destination	Origin	Diameter	Length	
			inches	mi	km
1	Kirkuk C.P. 2	Kirkuk C.P. 1 & Tank Farm	32		
2	Kirkuk C.P. 2	Kirkuk C.P. 1 & Tank Farm	24		
3	Kirkuk C.P. 2	Jambur North GOSP	20	17.2	27.68
4	Kirkuk C.P. 1	Jablbur GOSP	16	7.69	12.38
5	Kirkuk C.P. 1	Shurau GOSP	18	2.83	4.55
6	Kirkuk C.P. 1	Shurau GOSP - Part 1	18	0.895	1.44
7	Kirkuk C.P. 1	Shurau GOSP - Part 2	20	1.94	3.12
8	Kirkuk C.P. 1	Baba GOSP - Part 1	14	0.167	0.27
9	Kirkuk C.P. 1	Baba GOSP - Part 2	12	0.022	0.04
10	Kirkuk C.P. 1	Baba GOSP	10	0.189	0.30
11	Kirkuk C.P. 1	Jct. Avanal PL	24		
12	Kirkuk C.P. 1	Jct. Avanal PL	16		
13	Jct. Avanal PL	Avanal P.S.	24	19.83	31.91
14	Jct. Avanal PL	Avanal P.S.	24	19.83	31.91
15	Avanal P.S.	Saralu GOSP	16	3.61	5.81

Table 3. North Area Pipeline System

	Destination	Origin	Diameter	Length	
			inches	mi	km
16	Avanal P.S.	Saralu GOSP (partial loop)	18	3.03	4.88
17	Avanal P.S.	Sarbashakah GOSP	18	7.69	12.38
18	Avanal P.S.	Sarbashakah GOSP (p. loop)	18	4.73	7.61
19	Kirkuk C.P. 1	Hanjira GOSP	18	3.62	5.83
20	Kirkuk C.P. 1	Hanjira GOSP	18	3.62	5.83
21	Kirkuk C.P. 1	Qutan GOSP	20	6.2	9.98
22	Kirkuk C.P. 1	Bai Hassan GOSP	24	20.7	33.31
23	Bai Hassan GOSP	Bai Hassan North GOSP	18	3.71	5.97
24	Bai Hassan GOSP	Daoud GOSP	24	9.3	14.97
			Total	137.	220.

Table 3. North Area Pipeline System continued

The lengths of four of the identified pipelines are not known but they are expected to be relatively short.

As with the South Area, this list of pipelines is incomplete. It is based on information provided to date by the Client. However, oil fields and GOSPs are known for which we do not have connecting pipeline information. In the North Area pipeline information is lacking for pipelines from the GOSPs in the following fields: Saddam, Kabbaz, Qaiyarah, Ayn Zalah, Sufayah, and East Baghdad. These fields represent about 15 percent of the production capacity in the North Area.

c) North-South Strategic Pipeline System. This pipeline system was designed so that oil produced in the North area could be shipped and exported from the South area if need be and vice versa.

Table 4 presents the pipelines which are part of the North-South Strategic Pipeline System as if oil was being shipped from the North to the Rumailah Gathering Station in the South. In the reverse order of the flow, as used in the preceding tables in this appendix, the segments are listed from south to north. Some of the segments from Kirkuk C.P. 1 and Kirkuk C.P. 2 to K-1 pump station and on to the pump stations K-2W and K-3 were originally built to serve the Mediterranean export system through Syria. The table shows the diameter and length of each pipeline segment.

	Point 1	Point 2	Diameter	Length	
			inches	mi	km
1	Rumailah Gathering Sta.	Strat. Pipeline P.S. 2	42	117	188.29
2	Strat. Pipeline P.S. 2	Strat. Pipeline P.S. 3	42	100	160.93
3	Strat. Pipeline P.S. 3	Strat. Pipeline P.S. 4	42	97	156.11
4	Strat. Pipeline P.S. 4	K-3 P.S.	42	97	156.11
5	K-3 P.S.	K-2W P.S.	12	75	120.70
6	K-3 P.S.	K-2W P.S.	12	75	120.70
7	K-3 P.S.	K-2W P.S.	16	75	120.70

Table 4. Iraq North-South Strategic Pipeline

	Point 1	Point 2	Diameter	Length	
			inches	mi	km
8	K-3 P.S.	K-2W P.S.	32	75	120.70
9	K-3 P.S.	K-2W P.S.	32	75	120.70
10	K-2W P.S.	K-1 P.S.	12	62	99.78
11	K-2W P.S.	K-1 P.S.	12	62	99.78
12	K-2W P.S.	K-1 P.S.	16	62	99.78
13	K-2W P.S.	K-1 P.S.	32	62	99.78
14	K-2W P.S.	K-1 P.S.	32	62	99.78
15	K-1 P.S.	Kirkuk C.P. 1	20	short	
16	K-1 P.S.	Kirkuk C.P. 1	20	short	
17	K-1 P.S.	Kirkuk C.P. 1	20	short	
18	K-1 P.S.	Kirkuk C.P. 1	20	short	
19	K-1 P.S.	Kirkuk C.P. 1	32	short	
20	K-1 P.S.	Kirkuk C.P. 1	30	short	
21	K-1 P.S.	Kirkuk C.P. 1	24	short	
22	K-1 P.S.	Kirkuk C.P. 1	12	short	
23	K-1 P.S.	Kirkuk C.P. 2	24	short	
			Total	1096	1764.

Table 4. Iraq North-South Strategic Pipeline continued

Provided that the Iraq-Turkey export system operates in the North and the Mina al Bakr system (or its replacement) operates in the South, the Strategic Pipeline System has little significance. This system has significance only if there are significant delays in establishing the export system in each area capable of doing so. It will then be necessary to evaluate if the North-South pipeline can be brought into service so that total volume of exports can be increased.

2) Export Pipeline Systems. The following tables show Iraq's three export pipeline systems including their size and length. Sections of export pipeline systems outside of Iraq are not included.

a) IPSA Pipeline. This pipeline is an Iraqi export system from the southern area in addition to the Persian Gulf export terminals. Its design capacity is 1.6 million barrels per day (MM BPD). The pipeline proceeds south out of Iraq to Saudi Arabia and then heads west across Saudi Arabia to the Red Sea terminal at Yanbu. This pipeline was closed by Saudi Arabia after Iraq invaded Kuwait and Saudi Arabia seized the pipeline within its borders in 2001. **Table 5** shows the components of the IPSA pipeline in Iraq and the pipelines that feed it.

	Destination	Origin	Diameter	Length	
			inches	mi	km
1	Saudi Border	IPSA 2 Pump Station	48	23	37.
2	IPSA 2 P.S.	IPSA 1 P.S.	48	80	129.
3	IPSA 1 P.S.	Zubair P.S.	48	25	40.
4	IPSA 1 P.S.	Manfld on Rumailah/Janubia PLs	36	short	

Table 5. IPSA Pipeline

	Destination	Origin	Diameter	Length	
			inches	mi	km
5	Manfld on Rumailah/Janubia PLs	Manfld on Shamiya PLs	36	8	13.
6	Manfld on Shamiya PLs	Manfld on Qurainan PLs	30	3	5.
7	Manfld on Qurainan PLs	Tubah Tank Farm & P.S.	30	7	11.
8	Tubah T.F. & P.S.	Junction with ?		6	10.
9	Tubah T.F. & P.S.	Junction with ?		6	10.
			Total	158	254.

Table 5. IPSA Pipeline continued

The worst case plan assumes that the IPSA pump stations 1 and 2 will be destroyed and replaced and that export through Saudi Arabia will be possible pending that country's approval. In connection with the replacement of the Rumailah field GOSPs, consideration may be given to constructing a new pipeline from the GOSPs to the IPSA 1 pump station.

b) Iraq-Turkey (Kirkuk-Ceyhan) Pipeline (ITP). This is Iraq's major export system from Kirkuk and other North area oil fields. This system consists of parallel 40-inch and a 46-inch pipelines that extend from Kirkuk to the border with Turkey and on to the Mediterranean port of Ceyhan. The current design capacity of the 40-inch pipeline is 1.1 million barrels per day. The current design capacity of the 46-inch pipeline is 0.5 million barrels per day. However, some of the pump stations in Iraq have been destroyed and some are only partially operable according to the latest EIS Iraq Country Report. The 40-inch line is presently in use and some sections of the 46-inch pipeline are used to increase the capacity of the 40-inch system. **Table 6** shows the sections of the system within Iraq. This pipeline is part of the plan to restore crude oil exports from Iraq.

	Destination	Origin	Diameter	Length	
			inches	mi	km
1	M.S. at Turkey border	IT-2A P.S.	40	29.21	47.01
2	IT-2A P.S.	IT-2 P.S.	40	52.51	84.51
3	IT-2 P.S.	IT-1A P.S.	40	53.75	86.50
4	IT-1A P.S.	IT-1 P.S.	40	75.18	120.99
5	M.S. at Turkey border	IT-2A P.S.	46	29.21	47.01
6	IT-2A P.S.	IT-2 P.S.	46	52.51	84.51
7	IT-2 P.S.	IT-1A P.S.	46	53.75	86.50
8	IT-1A P.S.	IT-1 P.S.	46	75.18	120.99
9	IT-1 P.S.	Kirkuk C.P. 2	36		
10	IT-1 P.S.	Kirkuk C.P. 2	36		
11	IT-1 P.S.	Jambur South GOSP	10	29.55	47.56
			Total	450.85	725.57
	Additional connections for 46" pipeline may exist but are not known				

Table 6. ITP - Kirkuk-Ceyhan (Dortyol) Pipeline

c) Mediterranean Pipeline System Kirkuk to Banias and Tripoli. This system is more than 50 years old and was closed in 1982 by Syria. Syria and Iraq re-established trade

relations in 1998 and the press reports indicate that exports to Banias, Syria resumed in November 2000. Use of this system is not part of the plan to re-establish Iraqi crude oil export capability.

3) Pump Stations Electrical System Concepts

a) Power local to oil production facilities will be restored to operation at 50 Hz and provided by others. This is considered critical to the overall suitability/support of restoration at sites with moderate or partial damage. Further, preservation of the 50 Hz grid is the most efficient path toward future downstream production development and energy optimization initiatives.

b) Pumping stations with irreparable damage to pumps and/or their drivers will be retrofitted according to a "60 Hz quick fix" plan. This plan is intended to exploit the immediate availability of pumps rated for operation with 60 Hz electrical power. For these situations rental generators rated 60 Hz, also believed to be immediately available, will be installed to provide "60 Hz quick fix" electrical power to the damaged facilities. The typical worst case result will be certain "60 Hz quick fix" restored facilities operating independently and disconnected from the 50 Hz power grid.

c) To achieve "60 Hz quick fix" restoration, the pump station will be designed for readily available U.S. standard large pumps and generator rentals. Pumping stations with irreparable damage to pumps and/or their drivers will be retrofitted with 60 Hz power to exploit the immediate availability of pumps rated for operation with 60 Hz electrical power. Any existing auxiliary 50 Hz equipment which is suitable for operation at 60 Hz will be identified and evaluated for continued service. All new equipment will be designed for satisfactory operation at 50 / 60 Hz.

d) In the interest of future development initiatives, any pump station that is converted to U.S. voltages and frequency (i.e. 13.8k Volt / 4160Volt / 480Volt, 60 Hz) for "quick fix" restoration, if economically advantageous to do so, may be eligible to be restored to the site's original frequency and voltage once the local power grid is deemed reliable.

f) The electrical design is based on the 1.5 MM BPD capacity pump station and a 0.75 MM BPD pump station constructed at a "greenfield" site adjacent to each of the existing pump stations. The system is designed with redundant generation and the generator selection is based on the readily available unit identified by the U.S. Army Corps of Engineers. In many cases the generators selected could be oversized based on actual site loads, but due to delivery time constraints these slections are best for a "quick fix" solution. These generators are, however, sufficiently sized to accommodate any known pump station loads. The immediate availability of more-suitably sized 50 Hz equipment will be considered as an option.

h) Fuel gas for operating gas turbines generators or existing pumps will be taken from the existing gas system. If the existing gas system is not available, fuel gas will be taken from the nearest high pressure GOSP separator and piped to the gas turbines in the area.

b. Tasks. The first task is to assess the pipelines and the pump stations. The second task is to repair or replace the pipelines and pump stations. The following sections discuss these tasks in

turn for pipelines and for the electrical, mechanical, instrumentation, and piping systems of the pump stations.

1) Assessment of Pipelines. The objective of the assessment process is to determine if a pipeline can safely withstand the internal operating pressure created by the pipeline pump system.

A preliminary assessment of a pipeline can be made by a visual inspection of the line from one end to the other. Presumably this will be done from and airplane or helicopter. This visual assessment has at least two limitations.

- Even if there are no visual indications of a leak, the line may be incapable of withstanding the operating pressure due to corrosion or other factors.
- Visual assessment may identify indications of a leak that has already been repaired or incorrectly identify which line is leaking.

Nonetheless, visual assessment is likely to be the most expedient method of assessing the amount of repair work needed on pipelines. Visual inspection of gas pipelines should provide an indication of significant war damage even though leaks will not be marked by spill damage as for crude oil pipelines.

The visual assessment will require accurate, specific, and up-to-date information about the Iraq pipeline system. It is a natural and common tendency to place all types of pipelines in a common corridor. This means that crude oil, natural gas, and petroleum products pipelines may be adjacent to one another and may not be readily distinguishable for a visual assessment of condition if the pipeline system plans (layouts) are not known. The arrangement and use of the pipelines will be confirmed at every plant, pump station, terminal, etc.

2) Assessment of Pump Stations. If a pumping station has not been completely destroyed, assessment involves consideration of its electrical, instrumentation, mechanical, and piping systems and well as the associated civil and structural components.

a) Assessment of Pump Station Electrical Systems. Power for pump stations will be provided at required levels by others.

(1) Field/Site Surveys and Testing
Assessment Teams will be deployed consisting, as a minimum, of the following individuals in each team:

- One electrical engineer having electrical equipment and system protection expertise.
- One electrical technician with high/low voltage equipment testing expertise.

The Assessment Teams will survey the pump station units for both the Rumailah and Kirkuk oil fields to identify the condition and the capacity of the substation transformers, the electrical distribution equipment. Assessment Teams will determine the operating status or fitness for operation of the electrical distribution control equipment. The team will note in their survey of the potential source for any equipment currently applied for other service that might be used for restoration of electrical service for pump station loads.

- The site survey teams will be equipped with all necessary equipment and supplies to safely and completely conduct their assessment of the pump station electrical distribution equipment.

(2) Courses of Action (COAs) for Pump Station Electrical Systems

After the field surveys and testing, one of the following courses of action will be selected.

COA 1 (Minimal Damage)	• See Facility Assessment and Restoration Decision Map Diagram, **Figure 1** (next page). • Repair existing 50 Hz equipment. or • Replace existing equipment with new 50 Hz equipment. • Use Power Grid. or • Use 50 Hz Generator.
COA 2 (Moderate Damage)	• See **Figure 1** (next page). • Repair existing 50 Hz equipment. or • Replace existing equipment with new 50 Hz equipment. • Use Power Grid. or • Use 50 Hz Generator.
COA 3 (Major Damage)	• See **Figure 1** (next page). • Place electrical distribution equipment with new 60 Hz equipment. • Use 60 Hz Generators.
COA 4 (Major Damage; Pre-pos.)	• See **Figure 1** (next page). • Place electrical distribution equipment with new 60 Hz equipment. • Use 60 Hz Generators.

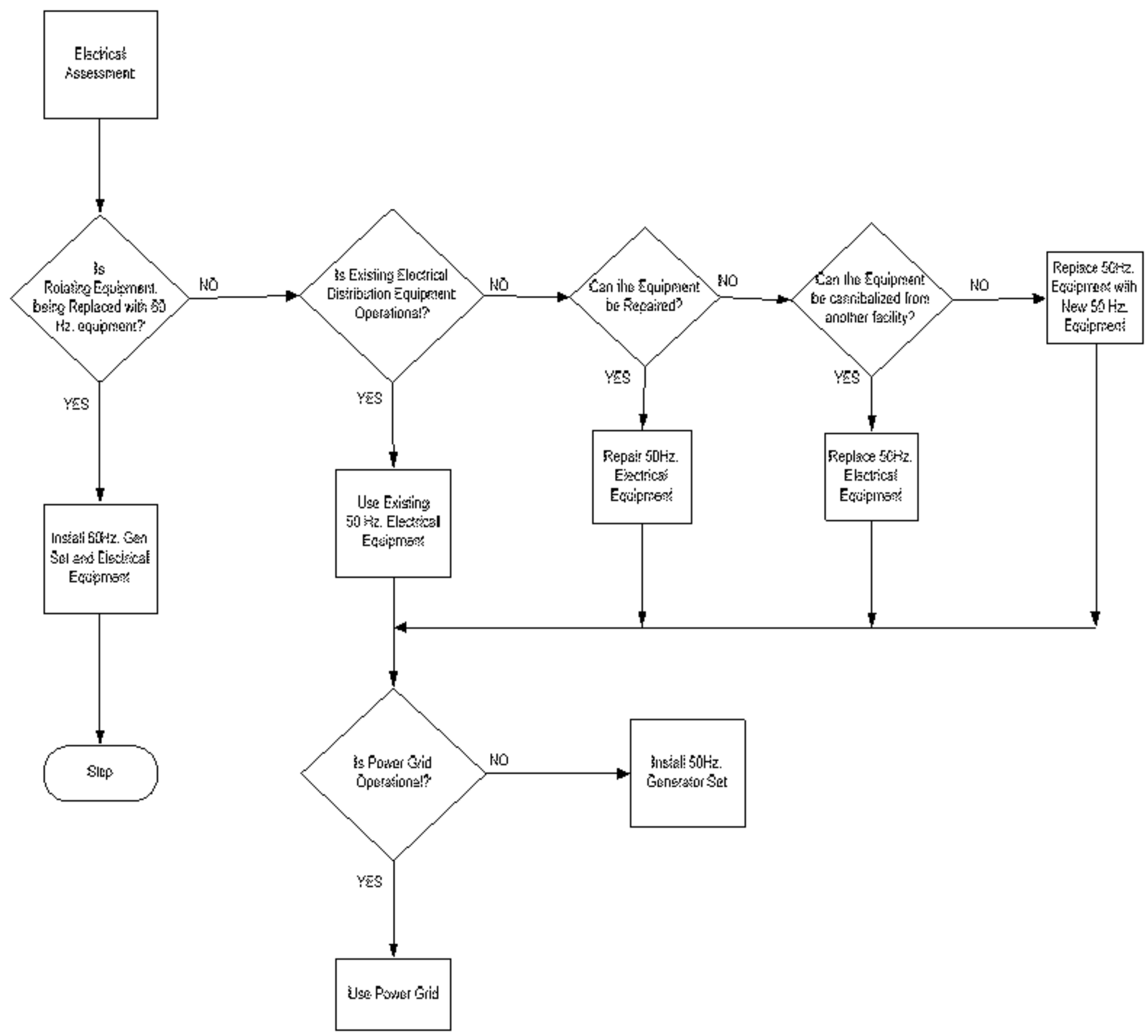

Figure 1: Facility Electrical Assessment And Restoration Decision Map Diagram

b) Assessment of Pump Station Instrumentation and Control Systems

For the case of minimal disturbance to a facility, a site survey of the instrumentation and control system will be required. As facilities have been in operation for many years they will have a variety of instrumentation and control systems in use ranging from pneumatic self contained controllers to electronic Distributed Control Systems. Repairs will involve evaluating the health of individual devices and systems to determine if they can be returned to service or replaced.

Transmitters if found defective will be easily replaced. Pressure gauges and thermometers can be acquired in standard ranges to facilitate rapid replacement.

Control valves and flow elements are sized based on facility process condition and can only be specified and replaced after the assessment is made. If control valves are found to be defective, manual bypass valves can be utilized until replacements can be sourced but they will require manual operator intervention. Local indicators will be required in sight of bypass valves to facilitate this control.

Relief valves at a minimum must be removed and tested prior to restart. As they are individually sized and will likely be from several different manufactures it is recommended that a selection of standard sized valves with a range of orifices is acquired to facilitate rapid replacement.

c) Assessment of Pump Station Mechanical Systems

Mechanical equipment condition will be assessed by field site surveys. Tanks, pumps, and other mechanical equipment will be assessed by respective specialists. The condition of equipment will be reviewed for repair or replacement. Details of restoration of availability of mechanical equipment for crude oil production are discussed in "Repair/Replacement Options-Pump Stations" paragraph below.

d) Assessment of Pump Station Piping Systems

Pump station piping can be defined as the lines connecting to the transmission pipelines, and lines that connect to equipment such as pumps, vessels, and tanks in the Pump Station. These lines are designed to ASME B31.3, Process Piping.

Initial assessment of the piping systems would be visual and will require a site/field survey. Aerial survey may point out major damage, however, these interconnecting piping are smaller in size than the pipelines and aerial survey may not identify damage.

Further assessment will be required to ensure suitability and integrity of the existing piping systems. The guidance on further assessment can be obtained from API 570 Piping Inspection Code: Inspection, repair, alteration, and re-rating of in-service piping systems, and API RP 574 Inspection practices for piping system components. This assessment will include inspection for types of corrosion and cracking, pressure testing, material verification, inspection of valves, flanged joints, and welds. Special equipment may be required for measurement of wall thickness and corrosion inspection.

For this phase, an API 570-certified inspector will be required.

e) Civil/Structural Assessment of Pump Stations and Pipelines

Civil/Structural will develop the site assessments and work orders required to repair or replace the concrete and steel structures required by the project.

Civil infrastructure will be assessed and repaired as required to allow access for the mission. Civil structural will be responsible for material MTOs in the project areas.

3) Repair / Replacement Options - Pipelines

a) Pipeline Repair Plan

Those sections of pipelines damaged by warfare or sabotage will have to be replaced. Cutting out and replacing sections of pipeline is a standard industry practice. Guidance regarding all types of acceptable repairs to crude oil pipelines can be obtained from ASME B31.4 and from American Petroleum Institute publication RP 2200, Repairing Crude Oil, Liquefied Petroleum Gas and Product Pipelines. Guidance regarding all types of acceptable repairs to gas pipelines can be obtained from ASME B31.8. This code also provides valuable

guidance for design, operation, and repair of sour gas pipelines that will be encountered in northern Iraq. ("Sour" indicates that the gas or oil contains hydrogen sulfide, H_2S. H_2S is not only highly toxic but also can embrittle steel pipelines and their welds unless appropriate steel alloys are used together with appropriate welding procedures as described ASME B31.8 (1999) and the references it cites.

b) Maximum Allowable Operating Pressure

The key issue in returning a pipeline to service with the desired flow capacity is to establish that it has an adequate MAOP (Maximum Allowable Operating Pressure). The MAOP is a function of the pipe diameter, pipe wall thickness, and pipe grade (specified minimum yield strength). For new pipelines the design MAOP is verified by a hydrostatic test. For existing pipelines the MAOP may be affected by corrosion and other types of damage (assuming ruptures have been repaired). The effects of the damage on the MAOP can be established by hydro testing, pressure testing, or by a high-resolution internal inspection. The pros and cons of these methods are discussed below.

c) Pressure Test

In a pressure test a section of the pipeline is pressured with its existing crude oil contents. For a hydrotest the oil is displaced with water and the pressure test is conducted with water. A pressure test of a gas pipeline should always be a hydrotest. If the line ruptures during the test, the consequences of testing with crude oil can be much more significant than if testing with water. The fundamental problem with pressure testing existing lines is that if the line is heavily corroded or damaged the result can be a series of individual failures, repairs, retests, additional failures lasting an indefinite period of time. A further complication is that the ends of the section being tested are commonly chosen to be closed valves. If the valve leaks it is sometimes possible to inject sealant to obtain a seal. If this does not stop the leak, the line must be cut from the valve and capped in order to do the pressure test. Guidance about pressure testing is available from American Petroleum Institute publication RP 1110, Pressure Testing of Liquid Petroleum Pipelines.

d) Internal Pipeline Inspection

An internal inspection is conducted by pumping an instrumented device through the pipeline. Objects pumped through pipelines are known as "pigs." Instrumented devices designed to accurately measure the wall thickness of the pipeline as it is being pumped through it are known as high resolution pipeline inspection pigs. Inspections with this type of device are available from several service firms including Pipeline Integrity International (PII), Tuboscope, and H. Rosen. This service is available for all pipeline sizes. The firms can provide an interpretation of the results in terms of the MAOP for each damaged area of the pipeline. If all of the areas with an MAOP less than the desired MAOP are repaired (reinforced), then the MAOP of the pipeline should be satisfactory for operation. To satisfactorily perform this type of inspection the following steps and conditions must be satisfied.

(1) The pipeline must have hydraulic integrity, i.e. all ruptures and leaks must have been repaired.

(2) Pigs must be able to pass through the pipeline. Some types of valves, bends with radii less than 3 pipeline diameters (possibly 5 pipeline diameters depending on inspection tool), and other factors can preclude passage of an inspection pig. This is normally established by review of the pipeline plans by the service company and ultimately by pumping a gauging pig through the pipeline.

(3) The pipeline must be clean of debris and of deposits on the internal wall of the pipeline. This condition is obtained by repeatedly pumping of scraping/cleaning pigs through the pipeline until they come out clean. (Clean in this sense does not mean clean of crude oil. Pigs of all types are compatible with continued operation of a crude oil pipeline)

Obviously, a pipeline must have considerable integrity for the pigs to be pumped through it. The process of preparing an operating pipeline for a pipeline inspection can easily last a several weeks to a month. After the inspection run has been made, it commonly takes two to six weeks to obtain the analysis of the data from the inspection service company. This is clearly a highly technical, specialized, lengthy, and costly process. The key advantage with it is that, once completed, the locations and extent of damage needing to be repaired are accurately known and the limiting operating pressure for using the pipeline "as-is" is determined.

The larger and more critical the pipeline is to the export objective, the more important it is to conduct an internal inspection for planning and reliability puuposes.

The final point to be made is that even after the obvious pipeline ruptures have been repaired, there will need to be a significant ongoing effort to establish pipeline capabilities and reliability and for additional construction to repair pipeline defects.

e) New Pipeline Construction

Under the worst case scenario construction has been considered for a new, 36-inch parallel loop pipeline of an existing 36-inch pipeline. The existing 36-inch pipeline and the new loop pipeline will move oil from the replacement Rumailah GOSPs to the replacement IPSA-1 pump station. The total approximate line length would be 0.5 miles. The objective would be to reduce power and pump station requirements as well as dependence on old pipeline systems. However, the viability of this approach remains to be confirmed by hydraulic engineering calculations.

A new 42-inch, four-mile pipeline from North Rumailah Central GOSP to the North Rumailah Gathering Station is also planned. The pipeline is needed to combine the North Rumailah Central GOSP oil production to the new pump station at the Gathering Station.

Additional information on these proposed new pipelines is provided in this Appendix under Tab E, GOSPs.

It is not anticipated that pipe would be on the critical path for either material acquisition or construction. Valves may be the most critical item for the construction of these new pipelines.

4) Repair / Replacement Options – Pump Stations

The worst case assumption is that each destroyed pump station will be replaced with one (or more) generic pump stations. A conceptual process flow diagram for a generic pump station is shown in **Figure 2** (next page). The following sections discuss the repair and replacement of pump station's mechanical, piping, electrical, and instrumentation systems.

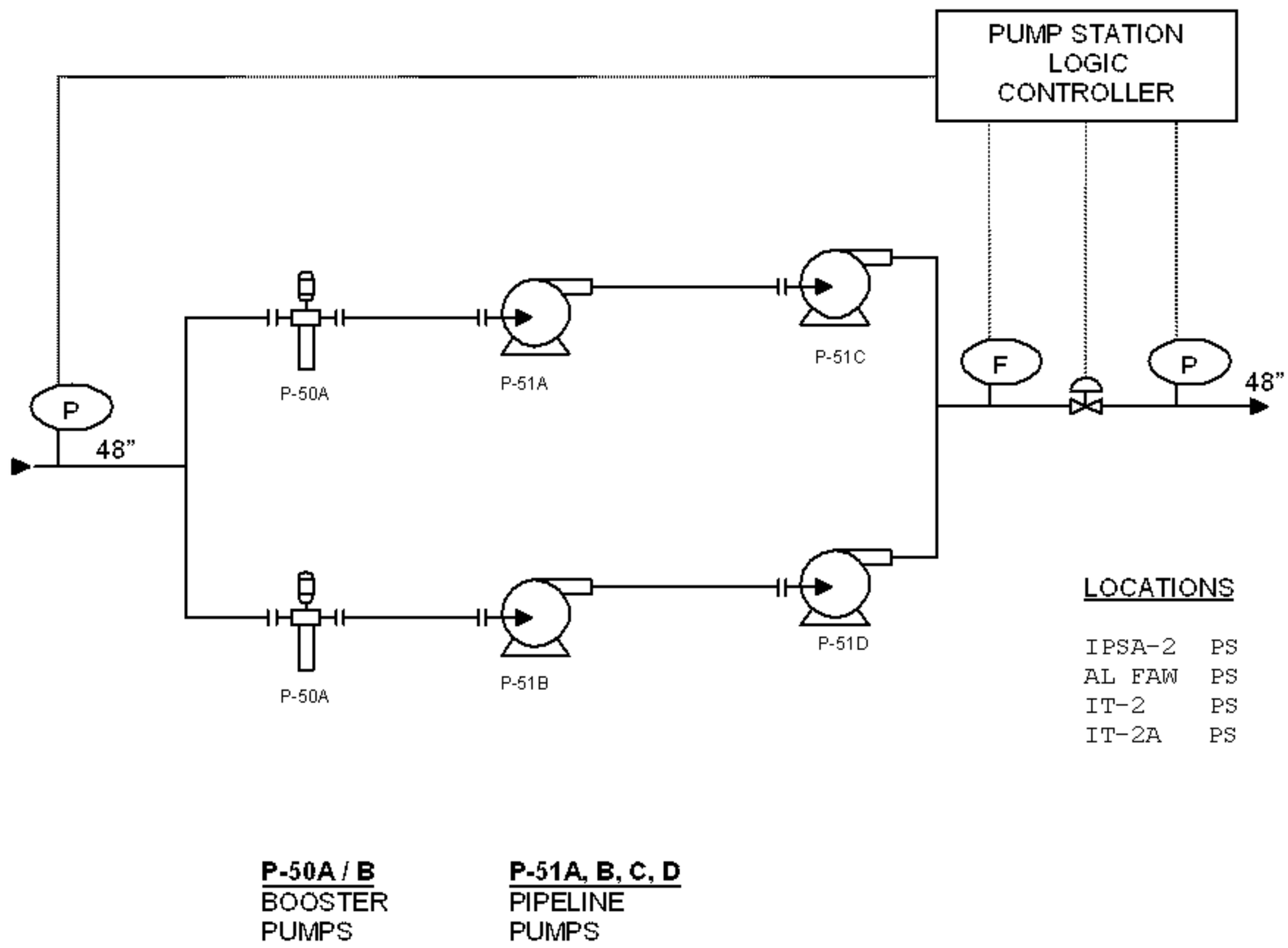

Figure 2: Typical Pump Station

a) Pump Station Mechanical System Engineering/Design

The initial assessment will include a survey of the following critical equipment, as a minimum, needed to establish immediate crude oil production: Booster pumps and drivers, shipper pumps and drivers, chemical injection packages, gas turbine driven electric generators, diesel engine driven emergency generators, instrument air compressor package, firewater pumps, and firewater storage tanks.

The initial assessment will identify equipment that can be repaired and equipment that must be replaced for the "quick fix" phase. Any equipment that must be replaced will be placed on immediate requisition.

Equipment for the "Greenfield" phase will be placed on immediate requisition.

All equipment to be purchased new will be specified for compliance with latest editions of KBR standards and corresponding industry standards for respective equipment items. E.g. hydrocarbon pumps will be specified to API 610, latest edition and corresponding KBR centrifugal pump specification.

b) Pump Station Piping Repair /Replacement

Damaged pipe shall be repaired or replaced. Repair, alteration and re-rating of piping systems shall be per API 570, and fabrication and design shall be per ASME B31.3. Removal and replacement of the damaged section is acceptable. Piping Engineer will determine if repair or replacement with new spools are more practical for the situation. Undamaged piping material and fittings may be re-used.

If the equipment that the piping is connected to is replaced and not identical to the old equipment, the piping will not fit and will need to be revised or replaced. Certified information on new equipment will be required right away.

Valves shall be inspected externally and internally for damage. Damaged valves shall be repaired as much as possible, or replaced if damage is major. Valve seals, O-rings, seats, and operators, if any, shall be checked. Flanged connections shall be checked for gaskets. Damaged gaskets shall be replaced.

It is recommended that high precision surveying equipment such as HICAD (digital capture) be used to verify elevations and orientations. If piping is rerouted due to equipment change or relocation of equipment, a stress review is required to verify loads and stresses.

c) Pump Station Electrical System Engineering/Design

Using input from the pump station Assessment Teams, engineering will determine appropriate repair/restoration design. Design drawings and other documents will be prepared to facilitate site Construction activities. Specifications will be prepared for any engineered equipment identified for replacement or needed to otherwise make the pump station suitable for support of oil field production. In addition to drawings, specifications, and other Construction support documents, engineering will prepare complete bills of material along with the equipment specifications, purchase of the necessary materials and equipment needed for restoration.

With severe levels of damage to rotating equipment at certain pump station, a 60 Hz "quick fix" electrical restoration will be implemented (see Figure 1, page 10, Facility Electrical Assessment and Restoration Decision Map Diagram) in order to minimize the time oil production is lost. This "quick fix" solution results in the need of one or more LM2500, 60 Hz generators or Solar Centaur (2 MW units) and new 60 Hz electrical distribution equipment. Once the appropriate level of power is provided by others, the pump station will be restored to the site's original voltage and frequency.

The design, construction and installation of a new pump station are based on a 60 Hz system and shall be in accordance with American industry standards, codes, and practices. The design shall be based on the following standards: NEC, ANSI, IEEE, NEMA, and UL. Repairs or up-grades to existing Pump Station where the power system is to remain at 50 Hz shall be in accordance with prevailing standards, codes, and practices where applicable.

The design of all pump stations are similar in the respect that the electrical system is based on 4160 V generation with step-up transformers to supply power for the shipping pumps rated 13.2 kV, 3500hp, 60 Hz, 3 ph. The booster pumps and stabilizer pumps will be 4000 V, 60 Hz 3 ph electric drives. The system voltage for low voltage motors and loads shall be 480 V, 3 ph, 60 Hz

(1) Electrical Equipment

For the "quick fix" solution, the electrical distribution and control equipment will be installed in a pre-fabricated electrical building. This building will house the 15 kV switchgear, 4.16 kV switchgear/MCC, 480 V switchgear, low voltage MCC, UPS system, 125 VDC system, and lighting panel boards. The building will include a battery room and a control room. All equipment will be pre-installed in the building, wired and tested at the building fabricator's facility. The electrical building will include 100 percent redundant HVAC and pressurization units. The completed building will be shipped as a package unit to the pump station site in one or more shipping sections dimensionally designed for air freight and arranged for easy field re-connection. The approach of a pre-fabricated building will facilitate the construction and commissioning efficiency.

Provision for future power grid tie-in will be accomplished by installing two future incoming breaker sections on the 15 kV switchgear. These incoming sections ultimately will be supplied grid power from 11 kV step-down transformers.

New 60 Hz transformer will be equipped with taps as required to permit 50 Hz operation at coresponding 50 Hz standard voltages (i.e. 13.8/11 kV, 4.16/3.3 kV, 480/380 V)

Ajustable fequency drives (AFD's) may be considered for application to large 60 Hz pumps as an option. The AFD's would allow 3500 hp, 13.2 kV, 60 Hz electric motor drivers for pipeline shipping pumps to be used on a 50 Hz power grid. The AFD would provide frequency conversion from 50 Hz to 60 Hz for the 60 Hz electric motor and would also provide a "soft start" for the 60 Hz electric motor, which would decrease the amount of generation required. The AFD could be used for flow control on the pipeline shipping pumps as well.

The Control Room will house the Safety System and the Plant Automation System cabinets, computer consoles and associated furniture for the operators. The equipment will be installed and wired at the building fabricator's facility.

(2) One-Line Diagrams

Figure 3 (next page) shows a conceptual one-line diagram for a Typical Pumping Station.

Figure 4 (page 18) shows a conceptual one-line diagram for a 750,000 thousand BPD pumping station. (Rumailah Gathering Center Pump Station).

Figure 5 (page 19) shows a conceptual one-line diagram for a 1.5 MM BPD pumping station. (IPSA 1 Pump Station).

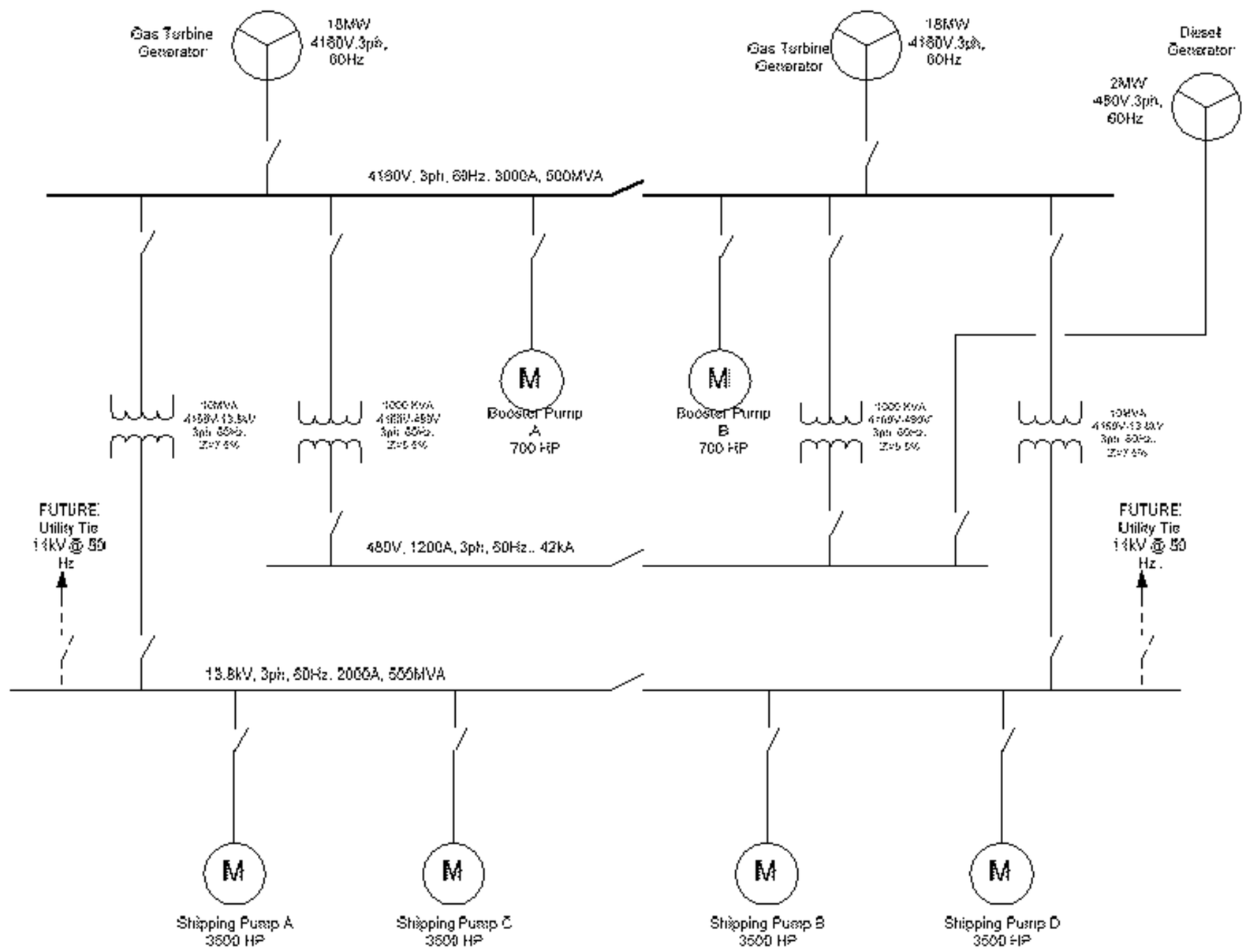

FIGURE 3: Conceptual One-Line Diagram for a Typical Pump Station

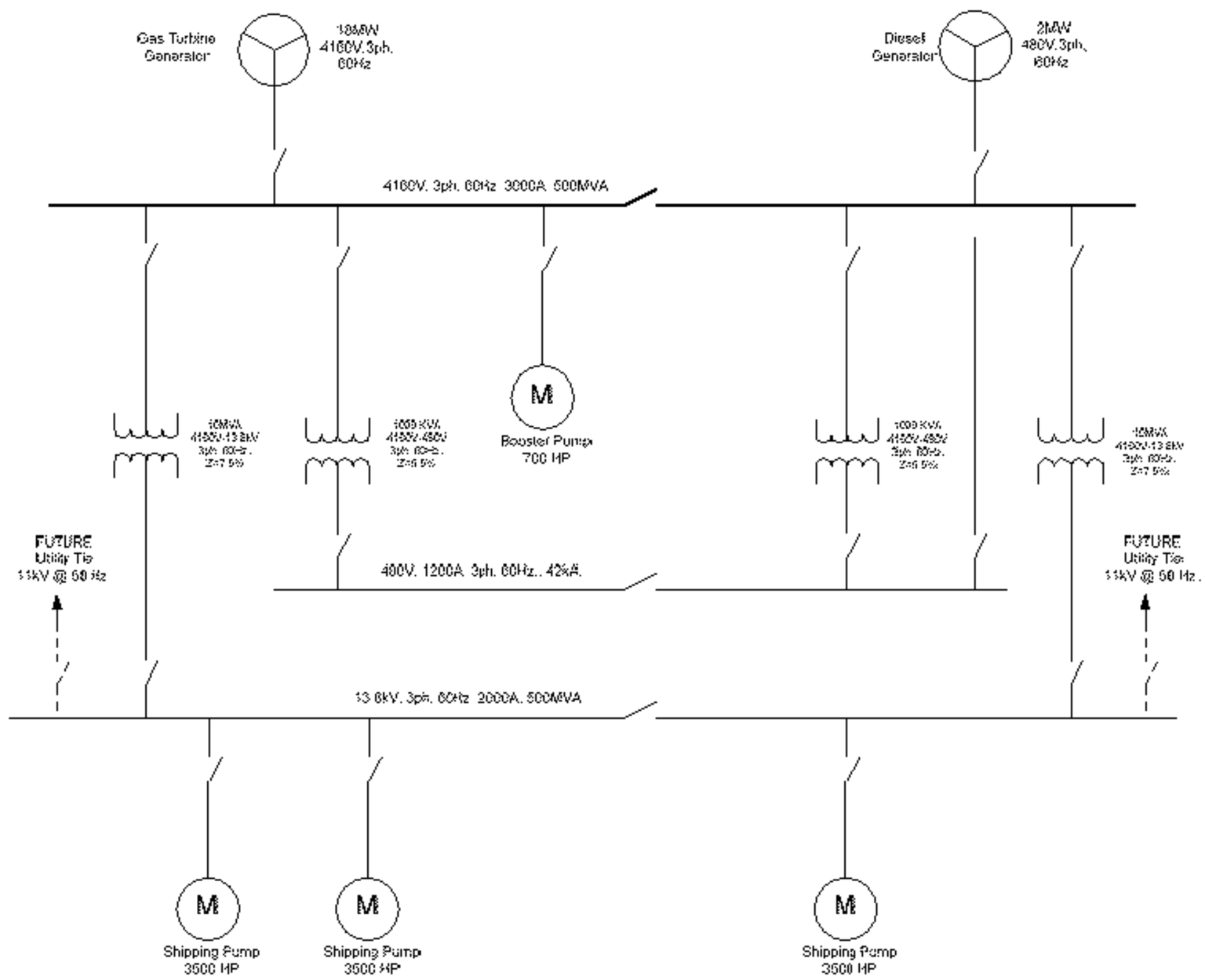

FIGURE 4: Conceptual One-Line Diagram for a 750,000 Thousand BPD Pump Station

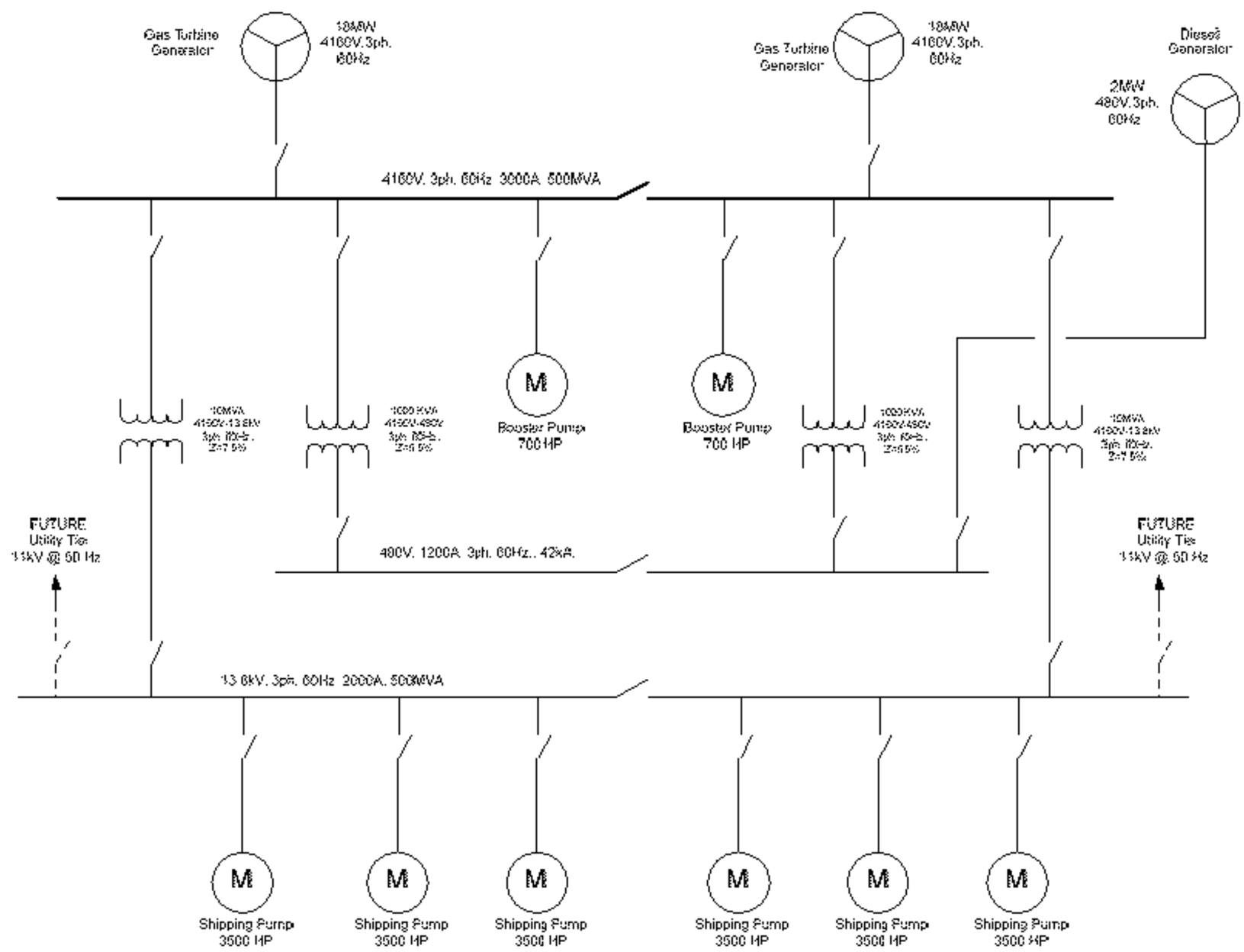

FIGURE 5: Conceptual One-Line Diagram for a 1.5 MM BPD Pumping Station

d) Pump Station Instrumentation Engineering/Design

For worst case scenario requiring construction of new facilities, it is envisioned that a new control system based on standard Industrial Control System will be added. This system is referred to as the Plant Control and Monitoring Systems (PCMS). The PCMS shall consist of new field instrumentation and new computer based sub-systems (Process Automation System and Safety System).

All instruments and control systems shall comply with recognized industry standards.

The field instrumentation will be wired to local junction boxes distributed throughout the facilities. Cables from the local junction boxes will be wired to Controllers and Input/Output (I/O) Panels for the PCMS. The Process Automation System (PAS) and Safety System controllers and I/O panels will be located in the Control room. See **Figure 6** (next page) for typical system architecture.

A Control Center shall serve as the primary operator interface and monitoring location for each facility. The Control Center shall be in a dedicated area of the Electrical Building for the facility. A PC-based desktop computer shall serve as the operator's console for the PAS and Safety System. This console shall interface with the PCMS via a data highway.

The following design practices will be adhered to in the design of a new facility:

- Standard 24 VDC, 4-20 milliamp field transmitters shall be utilized to monitor and control the various flow, pressure and temperature process conditions.
- For pressure measurement transmitters and gauges shall be connected to vessels (1 ½" minimum) and piping (3/4" npt) utilizing isolation valves.
- Flow measurement for non custody transfer application shall primarily be made with orifice meters. For custody transfer of oil, turbine meters shall be utilized and for custody transfer of gas, orifice meter runs shall be used. For orifice meters the preferable connection is to direct mount transmitters to minimize impulse line errors.
- Temperature transmitters shall be direct mounted to thermowells. Elements shall be 100 ohm platinum RTDs. Thermowells shall be fabricated from 316 SS bar stock as a minimum, with 1 ½" flanged process connections on piping and 2" on vessels.

A safety system independent, stand-alone, high integrity system shall be provided to implement safety related interlocks. SIS systems will be designed and programmed based on approved cause & effect charts. The cause and effects are based on the requirements of API-RP-14C and all modifications to the approved logics will require a management of change procedure. The SIS system shall be selected to provide necessary reliability to bring facility to a safe condition in case of an upset.

In general, the trip philosophy shall be a de-energize to trip (fail-safe) for process and pump trips. SIS sensors shall not be used for process control, but the same sensor may be used for monitoring. All SIS main controllers shall be connected to the PAS via redundant communication links to transmit alarm, status and command functions.

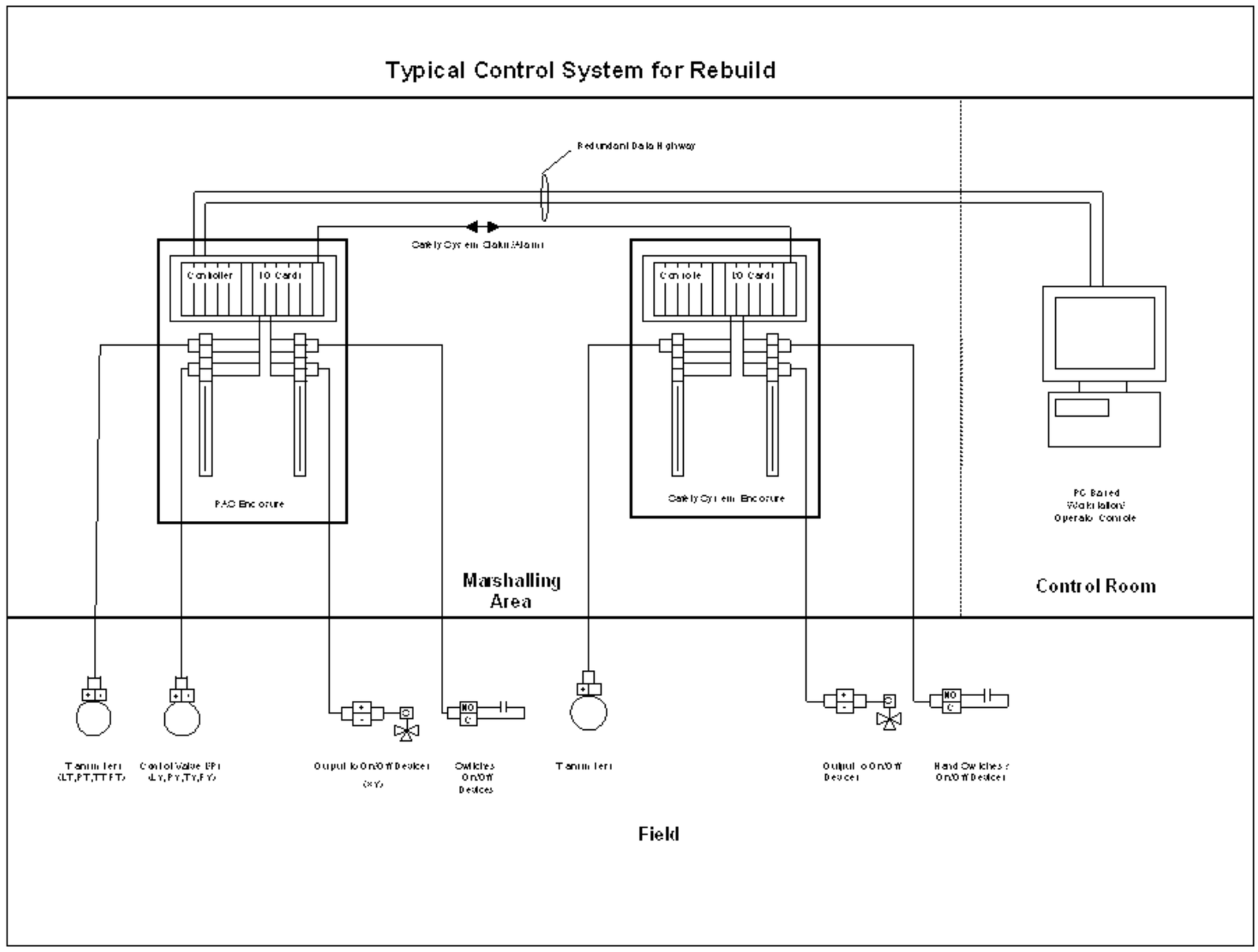

Figure 6. Pump Station Instrumentation and Control System Replacement

4. **SERVICE SUPPORT.** See Base PLAN and Annex I

5. **COMMAND AND SIGNAL.** See Base PLAN and Annex H.

ACKNOWLEDGE:

(b)(6)
BRS PGM, LOGCAP

OFFICIAL:
(b)(6) BRS D/PM

TAB I (INTERMEDIATE TERMINALS) to APPENDIX 2 (ENGINEERING) to ANNEX F (CONSTRUCTION & ENGINEERING) to LOGCAP CONTINGENCY SUPPORT PLAN

REFERENCES. See ANNEX N, Appendix 4.

TIME ZONE USED THROUGHOUT THE PLAN. Iraq.

TASK ORGANIZATION. See ANNEX A.

1. SITUATION. See Base PLAN.

2. MISSION. See Base PLAN.

3. EXECUTION. See Base PLAN.

a. Concept of Operations.

1) Strategic distribution will begin with a "quick fix" to move the product, followed by a plan to provide long-term operation.

2) Quick fix will provide 300 million barrels per day (MM BPD) crude export via Al Faw Terminal to the Mina Al Bakar marine facilities.

3) The follow up phases will complete facilities to achieve:

(a) Export 2.7 MM BPD via Al Faw, IPSA pipeline, and/or I-T pipeline.

(b) Provide 0.4 MM BPD crude oil for in-country refining/consumption.

4) The restoration scenario ranges from minor repair and refurbishment to major damage with complete "greenfield" replacement. The unknown design details, capacities, etc. of the existing in-place facilities will not be available until Assessment Teams begin work in-country. The extent and degree of damage to expect is also unknown. Due to the level of unknowns, the restoration is not based on repair and reuse of the existing facilities.

5) This basis allows the fastest program of design, construction and startup to reach the target export level and provide in-country products.

6) Restoration will be a "greenfield" site next to the existing storage terminals selected.

7) Restoration of the pumping station will be a standard generic station with one or two sets of series pumps depending on the required capacity and outlet pressure. The pump station will be constructed at a "greenfield" site next to existing stations.

8) Additional engineering studies show that new larger pipelines can replace the existing pipelines and reduce the pump sizes currently assumed.

9) This power will be supplied to the battery limit of each terminal by others. This is considered critical to the overall suitability/support of restoration at sites with moderate or partial

damage. Further, preservation of the 50 Hz grid is the most efficient path toward future downstream production development and energy optimization initiatives.

10) To achieve "quick fix" restoration, the pump station and terminal will be designed for the readily available large pumps and generator rentals identified by the U.S. Army Corps of Engineers. Pump Stations and Terminals with irreparable damage to pumps and/or their drivers will be retrofitted with 60 Hz power to exploit the early availability of pumps rated for operation with 60 Hz electrical power. Any existing auxiliary 50 Hz equipment which is suitable for operation at 60 Hz will be identified and evaluated for continued service. All new equipment will be designed for satisfactory operation at 50/60 Hz.

11) In the interest of future development initiatives, any pump station or terminal that is converted to U.S. voltages and frequency (i.e. 13.8 kV / 4160 V / 480 V, 60 Hz) for "quick fix" restoration, if economically advantageous to do so, may be eligible to be restored to the site's original frequency and voltage once the local power grid is deemed reliable.

12) Restoration will be a standard generic pump station constructed at a "greenfield" site next to each existing pump station location. The electrical distribution system is based on the standard generic pump station operating at 60 Hz.

13) Fuel gas for operating gas turbines generators or existing pumps will be taken from the existing gas system. If the existing gas system is not availible, fuel gas will be taken from the nearest high pressure GOSP seperator and piped to the gas turbines in the area.

14) Generic Major Pump Station Capacity.

(a) The generic pump station, illustrated in **Figure 1 (next page)**, has two parallel sets of pumps to handle the flow rate of up to 1,500 MM BPD. Each pump set is one booster and 2 shipper pumps in series. The booster pump raises the pressure by 40 psi for delivery to the suction of the shipper pumps. The two series shipper pumps increase the flowing pressure by 173 psi each. The booster pump and two shipper pumps gives the pump station a pressure rise of 386 psi.The initial export capacity for Al Faw Terminal, during the 1.2 MM BPD production phase, is required to be 300 MM BPD. The follow-up 2.4 MM BPD phase will require an increase up to a total of 1.1 MM BPD export quota for Al Faw. The 3.1 MM BPD phase will require an increase to a total of 1.8 MM BPD export quota for Al Faw.

(b) The initial 1.2 MM BPD quick fix phase, will be started up with a one train generic pump station set. Later, the 1.1 MM BPD export quota for the 2 nd phase will require an additional set, making two generic pump stations at Al Faw. The third phase will require an additional set, making three generic pump set at Al Faw pump station.

(c) The Al Faw pump station will operate as straight-thru if there are no tanks available.

15) Al Faw Storage Tanks.

(a) The second and third phase will require storage tanks at Al Faw for loading of ships. Four 1,000,000 barral tanks at Al Faw pump station. The storage tanks will give 48 hr of storage for the pipeline. The booster pump will float on the storage tanks and the inlet pipeline.

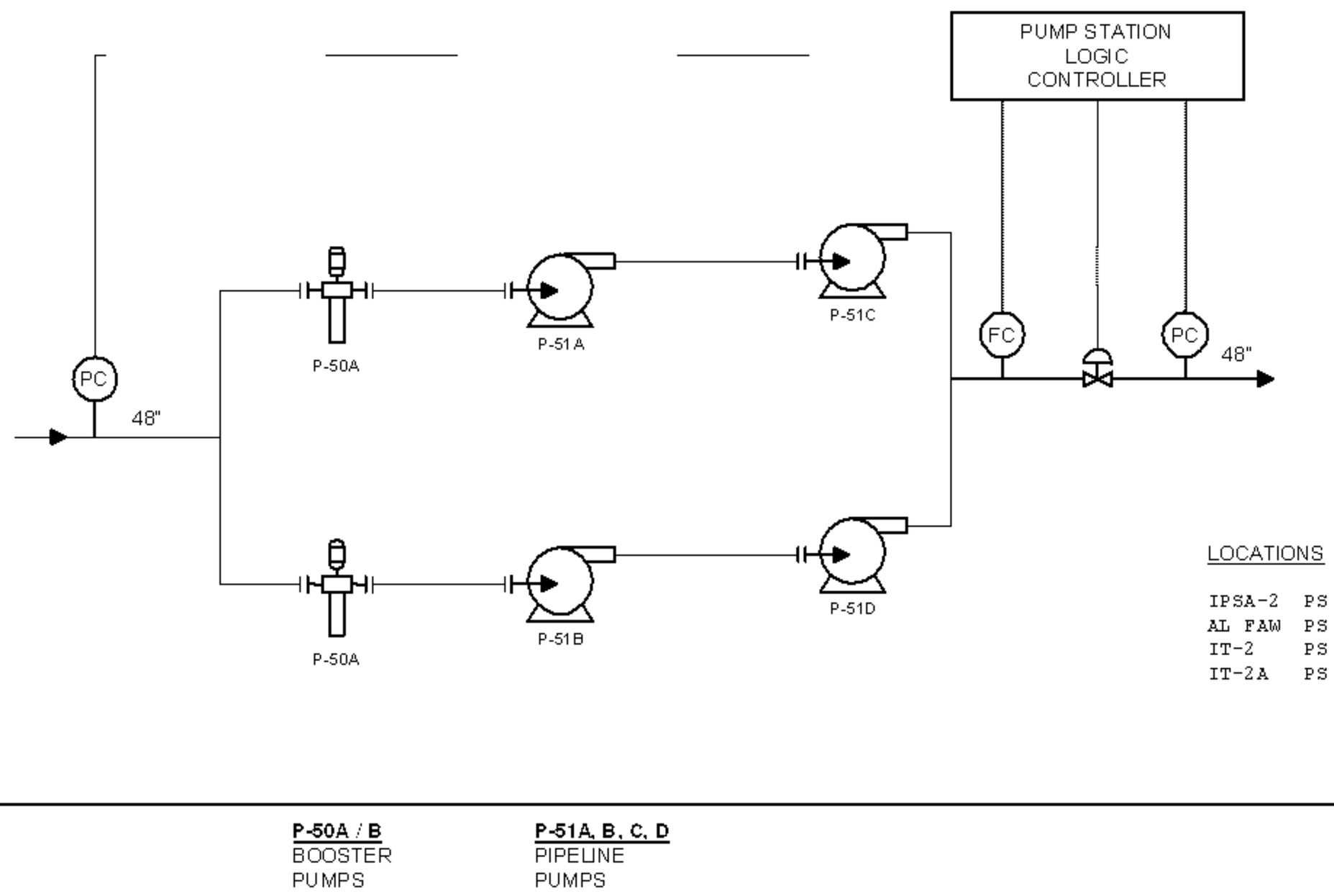

Figure 1: Typical Generic Pump Station

b. Tasks.

1) **Electrical System Field/Site Surveys and Testing.** The efforts for assessment and restoration for the terminal will consist of the following major activities:

2) **Assessment Teams:** The Assessment Teams will survey the terminal units for both the Rumailah and Kurkuk oil fields. They will identify the condition and the capacity of the substation transformers and the electrical distribution equipment to adequately supply the electrical loads of the terminal. The operating status or fitness for operation of the electrical distribution control equipment will be determined. The team will note in their survey of the potential source for any equipment currently applied for other service that might be used for restoration of electrical service for terminal loads.

3) **Restoration:**

(a) **Terminal Electrical System Engineering/Design.** Using input received from the terminal assessment teams, engineering will determine appropriate repair/restoration

design. Design drawings and other documents will be prepared to facilitate site construction activities. Specifications will be prepared for any engineered equipment identified for replacement. In addition to drawings, specifications, and other Construction support documents, engineering will prepare complete bills of material along with the equipment specifications, purchase of the necessary materials and equipment needed for restoration.

With severe levels of damage to rotating equipment at the terminal, a 60 Hz "quick fix" electrical restoration will be implemented, as described in **Figure 2** (next page). This "quick fix" solution results in the need of one or more LM2500, 60 Hz generators or Solar Centaur (2 MW units) and new 60 Hz electrical distribution equipment. Once the local grid is restored and available as a source of reliable power, the terminal will be restored to the site's original voltage and frequency.

Undamage, operational terminals will remain on 50 Hz power. If the power grid is not available or deemed unreliable, temporary 50 Hz generation will be provided.

The electrical design is based on the terminal constructed at a "greenfield" site adjacent to each of the existing terminal locations selected. The system is designed with redundant generation and the generator selection is based on the readily available unit identified by the U.S. Army Corps of Engineers (USACE). See **Figure 3**, page 6. In many cases the generators selected could be oversized based on actual site loads, but due to delivery time constraints these slections are best for a "quick fix" solution. These generators are, however, sufficiently sized to accommodate any known terminal loads. The immediate availability of more-suitably sized 50 Hz equipment will be considered as an option.

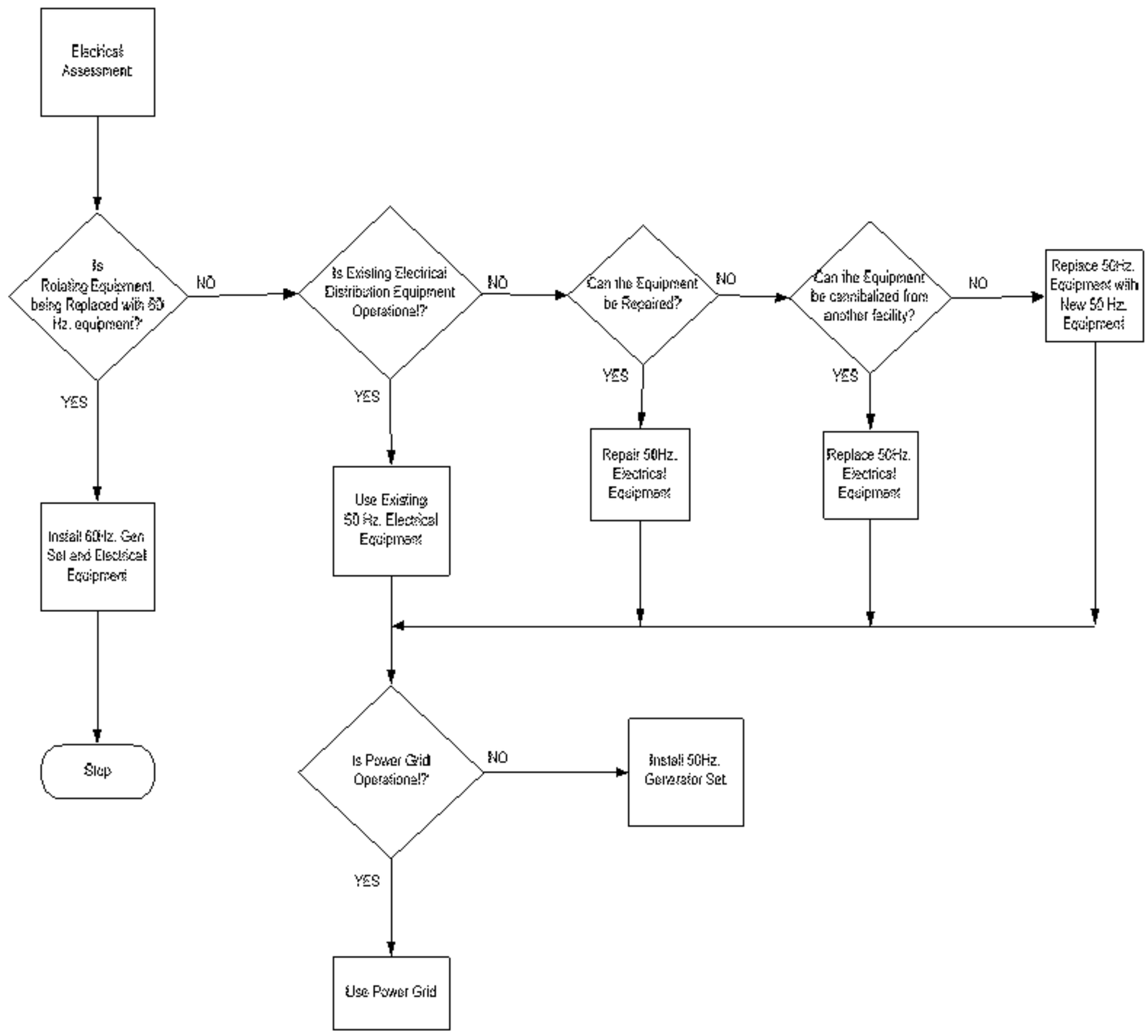

Figure 2: Facility Assessment and Restoration Decision Map Diagram

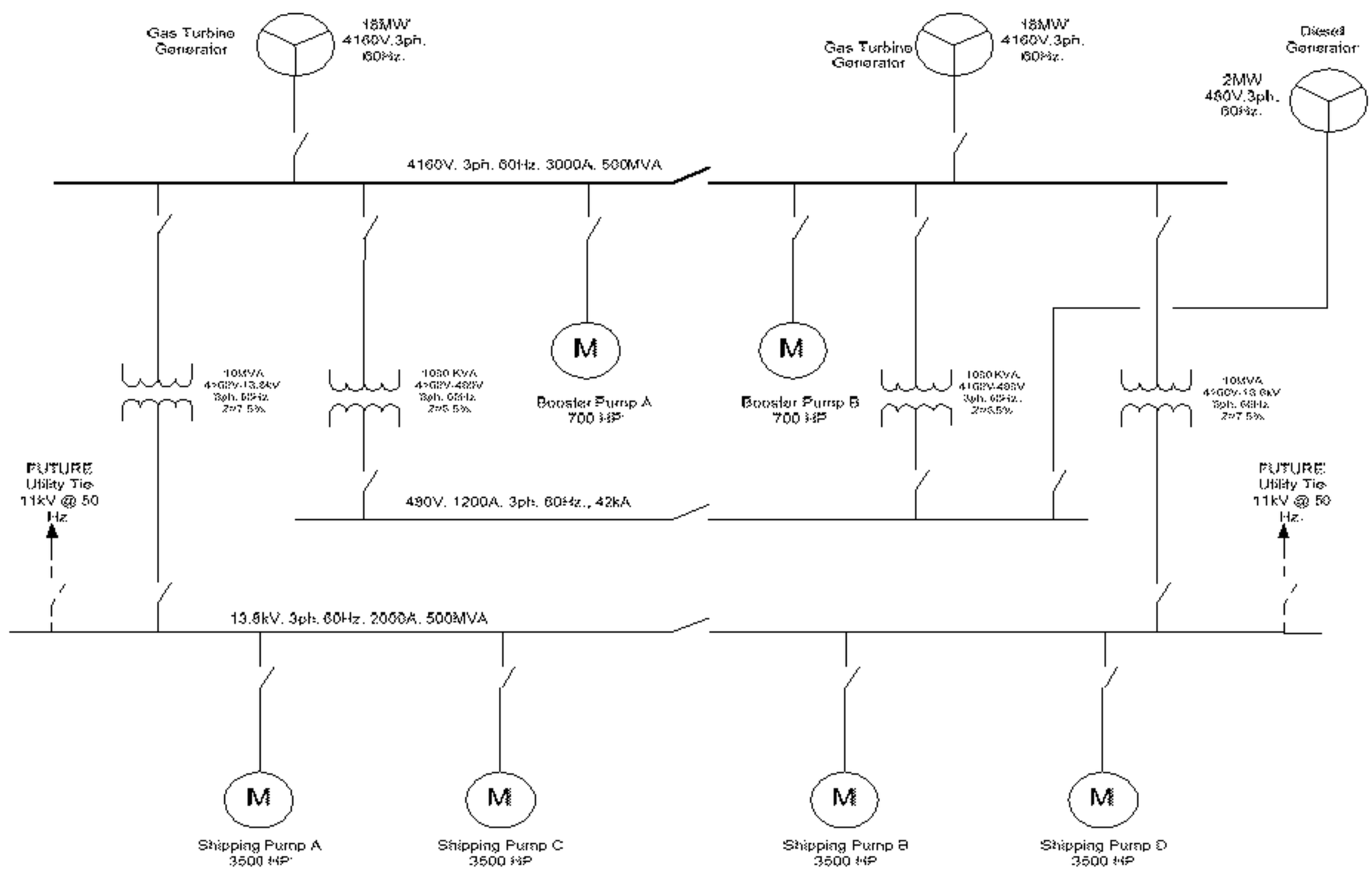

Figure 3: Al Faw terminal

The design, construction and installation of a new terminal are based on a 60 Hz system and will be in accordance with American industry standards, codes, and practices. The design will be based on the following standards: NEC, ANSI, IEEE, NEMA, and UL. Repairs or up-grades to existing terminals where the power system is to remain at 50 Hz will be in accordance with prevailing standards, codes, and practices where applicable.

The design of all Pump Stations are similar in the respect that the electrical system is based on 4160 V generation with step-up transformers to supply power for the shipping pumps rated 13.2 kV, 3500 hp, 60 Hz, 3 ph. The booster pumps and stabilizer pumps will be 4000 V, 60 Hz 3 ph electric drives. The system voltage for low voltage motors and loads will be 480 V, 3 ph, 60 Hz.

(b) **Electrical Equipment**. For the "quick fix" solution, the electrical distribution and control equipment will be installed in a pre-fabricated electrical building. This building will house the 15 kV switchgear, 4.16 kV switchgear/MCC, 480 V switchgear, low voltage MCC, UPS system, 125 VDC system, and lighting panelboards. The building will include a battery room and a control room. All equipment will be pre-installed in the building, wired and tested at the building fabricator's facility. The electrical building will include 100% redundant HVAC and Pressurization units. The completed building will be shipped as a package unit to the terminal site in one or more shipping sections dimensionally designed for air freight and arranged for easy field re-connection. The approach of a pre-fabricated building will facilitate the construction and commissioning efficiency.

New 60 hertz transformers will be equipped with taps as required to permit 50 Hz operation at coresponding 50 hertz standard voltages (i.e. 13.8/11 kV, 4.16/3.3 kV, 480/380 V).

Ajustable fequency drives (AFDs) may be considered for application to large 60 Hz pumps as an option. The AFD's would allow 3500 hp, 13.2 kV, 60 Hz electric motor drivers for pipeline shipping pumps to be used on a 50 Hz power grid. The AFD would provide frequency conversion from 50 Hz to 60 Hz for the 60 Hz electric motor and would also provide a "soft start" for the 60 Hz electric motor, which would decrease the amount of generation required. The AFD could be used for flow control on the pipeline shipping pumps as well.

The Control Room will house the Safety System and the Plant Automation System cabinets, computer consoles and associated furniture for the operators. The equipment will be installed and wired at the building fabricator's facility.

(c) **Mechanical Equipment**: The initial assessment will include a survey of the following critical equipment, as a minimum, needed to establish immediate crude oil production: Booster pumps and drivers, shipper pumps and drivers, chemical injection packages, gas turbine driven electric generators, diesel engine driven emergency generators, instrument air compressor package, firewater pumps, firewater storage tanks.

The initial assessment will identify equipment that can be repaired and equipment that must be replaced for the "quick fix" phase. Any equipment that must be replaced will be placed on immediate requisition.

Equipment for the "Greenfield" phase will be placed on immediate requisition

All equipment to be purchased new will be specified for compliance with latest editions of KBR standards and corresponding industry standards for respective equipment items. E.g. hydrocarbon pumps will be specified to API 610, latest edition and corresponding KBR centrifugal pump specification.

(d) Instrumentation: For each "greenfield" facility, a control system based on standard Industrial Control System will be utilized. This system is refered to as the Plant Control and Monitoring Systems (PCMS). The PCMS will consist of field instrumentation and computer based sub-systems (Process Automation System and Safety System).

The field instrumentation will be wired to local junction boxes distributed throughout the facilities. Cables from the local junction boxes will be wired to Controllers and Input/Output (I/O) Panels for the PCMS. The Process Automation System (PAS) and Safety System (SIS) controllers and I/O panels will be located in the Control room.

A Control Center will serve as the primary operator interface and monitoring location for each facility. The Control Center will be in a dedicated area of the Electrical Building for the facility. A PC-based desktop computer will serve as the operator's console for the PAS and Safety System. This console will interface with the PCMS via a data highway.

The following design practices will be adhered to in the design of a new terminal.

(1) Standard 24 VDC, 4-20 milliamp field transmitters will be utilized to monitor and control the various flow, pressure and temperature process conditions.

(2) For level measurement the preferred technology is radar as it is immune to the effects of changes in specific gravity of measured fluids. All level control and monitoring transmitters will be mounted on flanges on the top of tanks. For floating roof type tanks, float or hydrostatic gauging system will be utilized.

(3) Use of level gauges will be minimized but armored gage glasses will be utilized if necessary.

(4) For pressure measurement transmitters and gauges will be connected to vessels (1 ½" minimum) and piping (3/4" npt) utilizing isolation valves.

(5) Flow measurement for non custody transfer application will primarily be made with orifice meters. For custody transfer of oil, turbine meters will be utilized and for custody transfer of gas, orifice meter runs will be used. For orifice meters the preferable connection is to direct mount transmitters to minimize impulse line errors.

(6) Temperature transmitters will be direct mounted to thermowells. Elements will be 100 ohm platinum RTDs. Thermowells will be fabricated from 316 SS bar stock as a minimum, with 1 ½" flanged process connections on piping and 2" on vessels.

A safety system independent, stand-alone, high integrity system will be provided to implement safety related interlocks. SIS systems will be designed and programmed

based on approved cause and effect charts. The cause and effects are based on the requirements of API-RP-14C and all modifications to the approved logics will require a management of change procedure. The SIS system will be selected to provide necessary reliability to bring facility to a safe condition in case of an upset.

In general, the trip philosophy will be de-energize to trip (fail-safe) for process and pump trips. SIS sensors will not be used for process control, but the same sensor may be used for monitoring. All SIS main controllers will be connected to the PAS via redundant communication links to transmit alarm, status and command functions.

For the case of minimal disturbance to a facility where there is intent to restore the facility, a site survey will be required. As facilities have been in operation for many years they will have a variety of instrumentation and control systems in use ranging from pneumatic self contained controllers to electronic Distributed Control Systems. Repairs will involve evaluating the health of individual devices and systems to determine if they can be returned to service or replaced.

Transmitters if found defective will be easily replaced. Pressure gauges and thermometers can be acquired in standard ranges to facilitate rapid replacement.

Control valves and flow elements can not be pre-ordered. They are items that have to be specified base on facility process condition. If control valves are found to be defective, manual bypass valves can be utilized until replacements can be sourced but they will require manual operator intervention. Local indicators will be required in sight of bypass valves to facilitate this control.

Relief valves at a minimum must be removed and tested prior to restart. As they are individually sized and will likely be from several different manufactures it is recommended that a selection of standard sized valves with a range of orifices is acquired to facilitate rapid replacement.

Non electronic control systems will require eventual replacement with electronic systems as communication between GOSPs, Pump stations and Unloading terminals is essential for proper field operations.

(e) **Intermediate Terminal Piping**: This pertains to the piping interconnecting to the pipelines from GOSP's and Pumping Stations to the intermediate terminal and from the intermediate terminal to the main terminal pipelines. It also includes all piping interconnecting equipment within the intermediate terminal such as pumps, tanks, and vessels. This piping includes flare lines.

(1) Initial assessment will be visual. Aerial survey can show major damage on large lines, however, smaller size lines may not be determinable from the aerial survey. A field/site survey will be required to assess damage.

(2) If it is determined that the restoration effort will be for a minor repair and refurbishment, the "Quick Fix" phase will entail inspection by a certified piping inspector. Damaged piping will be repaired or replaced. Inspection, repair, testing and replacement will be per API 570 Piping Inspection code, API RP 574 Inspection

practices, and ASME B31.3 Process Piping. Repair may involve cutting and re-use of existing material.

(3) Valves will be inspected for damage and operability. Valve internals – O-rings, seals, gear operators, seats, etc. will be thoroughly checked and tested. Damaged valves will be replaced or repaired.

(4) Gaskets on flanged connections will be inspected. Damaged gaskets will be replaced.

(5) If equipment is to be replaced due to damage and the replacement equipment is not identical, the piping connected to the equipment will not fit and will have to be revised or replaced by new piping. Certified information on new equipment will be required.

(6) It is recommended that high precision surveying equipment such as HICAD (digital capture) be used to verify elevations and orientations.

(7) Pipe supports will be inspected. Damaged pipe supports will be repaired or replaced. Majority of pipe supports can be field fabricated from steel plates and structural members. Special supports such as springs will be procured.

(8) For new pipe routing or for a greenfield intermediate terminal piping, all piping will be analyzed per ASME B31.3 Process Piping Code and recommended vendor allowable loads. All piping systems will follow BRS standards and specifications for fabrication and installation.

(9) All piping will be non-destructive examination (NDE) and pressure tested per the piping code before acceptance. Supply of potable water will be made available for hydrotesting. Pneumatic testing is discouraged for safety reasons.

(10) All new and existing piping will have corrosion protection. Sandblasting and painting/insulation will be per BRS standards.

4. **SERVICE SUPPORT**. See ANNEX I.

5. **COMMAND AND SIGNAL**. See Base PLAN, ANNEX A, and ANNEX H.

ACKNOWLEDGE:

(b)(6)
BRS PGM, LOGCAP

OFFICIAL:
(b)(6) BRS D/PGM

TAB J (EXPORT) to APPENDIX 2 (ENGINEERING) to ANNEX F (CONSTRUCTION AND ENGINEERING) to LOGCAP CONTINGENCY SUPPORT PLAN

REFERENCES. See ANNEX N, Appendix 4.

The exportation plans to follow are based on References 1, 5, and 6.

1) Reference 1 Report of the Group of United Nations Experts Established Pursuant to Paragraph 30 of the Security Council Resolution 1284 (2000)
Reference 1 was prepared based on site visits to the Mina al Bakr Terminal and the Khor al Amaya Terminal on 27 January 2000.

2) Reference 2 Intelligence Research Paper prepared by the Directorate of Intelligence
1A 92-10019
RTT 92-10065
June 1992
"Mina al Bakr: Iraq Persian Gulf Oil Export Terminal (U)
Reference 2 is an Arial photograph and text describing damage to the terminal after Desert Storm.

3) Reference 3 Process Flow Diagram
Al Faw & Mina al Bakr Terminals
Drawing Number 670-PF-03 No Revision No Date
Army Corps of Engineers
Department of Defense
4) Reference 4 Mina al Bakr Deep Sea Terminal
Drawing Number 3-AFA-4 Revision 0 Dated 7-28-82

4) Reference 4 Mina al Bakr Deep Sea Terminal
Drawing Number 3-AFA-4 Revision 0 Dated 7-28-82

5) Simplified Flow Diagram
Southern Iraq
Drawing number 3-F-002
No revision dated 18 March 1985

6) Geographic Locations
Arabian Gulf Sea Islands
Drawing Number 3-M-118
Revision 1 dated 8 June 1985

TIME ZONE USED THROUGHOUT THE PLAN. Iraq.

TASK ORGANIZATION. See ANNEX A.

1. SITUATION. See Base PLAN.

2. MISSION. See Base PLAN.

3. **EXECUTION.** See Base PLAN.

a. **Concept of Operations - Terminal.** There are three scenario levels (worst, best, & most probable) considered for damage assessment/repair/replacement for the Mina al Bakr Terminal to ensure the stipulated export target levles.

1) **Worst Case.** In the worse case, there is major damage to all topside facilities including the deck structure while the support structures below the waterline remains sound. Extent of the damage includes all topside equipment, loading arms, electrical and piping. In the event of major damage to Mina al Bakr, three alternatives were considered.

a) Alternative No. 1 Completely replace the topsides.

b) Alternative No. 2 Use the partially completed Khor al Amaya terminal if major damage has not occurred.

c) Alternative 3 Install 2 No. SPM`s (Single Point Mooring) near Mina al Bakr.

2) **Best Case.** Under the best case, there is no collateral damage to the topsides and existing conditions similar to observations noted in the UN Report (Ref.1). Two alternatives have been considered for the minor damage case:

a) Alternative No. 1 - Fix or replace non operational equipment with new equipment provided supporting structures are sound and still have an adequate service life.

b) Alternative No. 2 - Install two No. Single Point Mooring (SPMs) near Mina al Bakr.

3) **Probable Case – Scenario 3.** This case is assumed to be the same as the Best Case Scenario. 2.

b. **Concept of Operations - Oil Export Pipelines.** Export pipelines carry the crude oil from a location inside Iraq to one of the export terminals in the Persian Gulf. Iraq has built two of these terminals: Mina Al Bakr and Khor Al Amaya. The purpose of this section is to discuss the export pipeline systems identified above. These pipelines have both on-land and offshore sections. Some material presented in Tab F, Pipelines-Pump Stations will be repeated here for completeness and convenience. Since the pipelines to the Persian Gulf terminals involve offshore pipelines, consideration of the special factors involved with the assessment, repair, and replacement of offshore pipelines are presented as items 3 and 4 under Section c., Tasks.

1) **Numbers, Sizes, and Lengths of Export Pipelines**. The following tables show Iraq`s export pipeline systems including their size and length.

a) **Mina Al Bakr**. This is Iraq`s main export terminal in the Persian Gulf. As shown in **Table 1** (next page), there are two 48-inch pipelines leading from the Al FAW pump station to the terminal. This terminal is in approximately 100 ft water depth.

	Destination	Origin	Diameter	Length	
			inches	mi	km
1	Mina Al Bakr	Al FAW South	48	30.39	48.91
2	Mina Al Bakr	Al FAW South	48	30.39	48.91
			Total	60.8	97.8

Table 1 Mina Al Bakr Export Pipelines

Khor Al Amaya. This terminal has been out of operation since 1991. Export through this terminal should be considered on a short term basis if Mina Al Bakr is heavily damaged. The 2 No. 30-inch pipelines would also require inspection and possibly repair prior to export through the terminal.

The pipelines supplying the Khor al-Amaya terminal are shown in **Table 2**. Some of these pipelines may no longer be serviceable.

	Destination	Origin	Diameter	Length	
			inches	mi	km
1	Khor Al Amaya	Al Mumiahah P.S. (removed)	42	19.88	31.99
2	Al Mumiahah P.S. (removed)	Al FAW North	42	7.45	11.99
3	Khor Al Amaya	Al FAW North	32	28.5	45.9
4	Khor Al Amaya	Al FAW North	32	28.5	45.9
			Total	84.3	135.7

Table 2 Khor Al Amaya Export Pipelines

c. **Tasks.**

1) **Worst Case.** In the event of major damage to Mina al Bakr, BRS investigated three alternatives.

a) Alternative No. 1 Completely replace the topsides.

(1) **Discounted.** To make use of the existing terminal substructures, the damaged topsides and bridges will be removed. This requires a heavy lift vessel and cargo barges to remove the topsides. This alternative also requires new equipment to be purchased and installed on new topsides in Dubai or Singapore, transported on cargo barges, and installed with a heavy lift vessel onto the existing substructures. This solution is not cost or schedule effective.

b) Alternative No. 2 Use the partially completed Khor al Amaya terminal if major damage has not occurred.

(1) **Discounted But Will Be Considered A Short Term Export Option For Alternative 3.** Based on the UN Report (Ref. 1) Platform B, Berths 7 and 8 are partially completed. The jacket substructure has been strengthened and work on the

topsides is nearing completion. Work is being carried out by SOC (Southern Oil Company) allowing output rates of 300K BPD and possibly increasing to 600K BPD. This capacity is insufficient to meet the initial target output of 2.1 MM BPD and is not considered a viable long term option.

c) Alternative No. 3 Install 2 new SPMs near Mina al Bakr.

(1) **Most Viable Option.** This alternative is based on the assumption that the risers to the Mina al Bakr oil terminal have suffered major damage either above or below the water line. In this case, the oil in the risers will be displaced by seawater flowing into the riser while oil flows out. This flow will be driven by the density difference of the fluids and will continue until the pipeline is filled with water to a point where the bottom of the pipeline on the seabed is above the top of the pipeline at the base of the riser. The following procedure will be used for the pipelines:

(a) Empty the pipelines of oil by applying the following procedures to each pipeline.

- Use a diving spread "hot" tap to plug the pipeline near the terminal. The pipeline will likely be filled with oily water at this location.
- Tap the pipeline just shoreward of the plug and install a tee, valve and flange.
- Install a hose from the flange tee to the surface where it will empty into an oil transport barge or tanker.
- Drive a pipeline dewatering pig from the onshore end of the pipeline toward the terminal emptying the displaced oil into barges or tankers. Pig should be driven with nitrogen.
- Prior to and while pigging the pipeline, carry out a visual observation of the pipeline route as described below in the section Assessment of Pipelines Offshore to locate leaks.
- The pig will travel until the lead cup passes the tee. At this point water is no longer being removed from in front of the pig and it will stop. Nitrogen will now be produced through the hose.
- Close the valve on the tee and maintain low pressure on the pipeline to prevent water ingress at any point. Remove the hose.

(b) Prepare the ends of each pipeline for continuation to SPM locations:

- If the pipeline is buried, jet soil away from the pipeline to free it for lifting off the seabed.
- Cut the pipeline just seaward of the plug.
- Using a pipelay or combination pipelay heavy lift construction barge lift the pipeline to the surface.
- While holding the pipeline in davits above the water cut off the end of the pipeline containing the plug, pig and tee.
- Install a laydown head on the end of the pipeline and lower to the seabed.

(c) Lay the continuation sections of each pipeline to the SPM locations:

- Recover the pipeline through the pipelay stinger to the barge firing line.

- Stalk on and lay 48" pipe until the SPM location is reached. This will be on the order of a mile or more from the terminal platform. An equilateral triangle configuration between the pipeline tie ins and the two SPMs is envisioned with each of these three installations at a vertex of the triangle.
- Laydown the 48" line. Recover it in the davits to the side of the barge and install the SPM manifold. The manifold will have a straight through passage to a 48" valve and flange on the end opposite to the incoming pipeline.

(d) Lay 48" connecting line between the two SPM locations.

(e) Trench pipelines consistent with existing 48" lines.

(f) Flood lines and install two connection spools between flanges on ends of the SPM manifolds and the connecting line.

(g) Clean, pig and hydrotest system per Section below, Repair / Replacement Options – Pipelines. This configuration can be pigged from a launcher onshore to a receiver onshore.

(h) Hook up SPM

This alternative assumes the short term option of exporting through Khor Al Amaya. The 2 No. 30-inch pipelines to the terminal will require inspection and possibly repair which is assumed for this alternative.

The Khor Al Amaya topsides will also require completion of restoration work and commissioning which is assumed for this alternative.

The Khor Al Amaya jacket sustructure will also require inspection and possibly repair which is assumed for this alternative.

Budget / Schedule Considerations:

- This alternative considers a short term option of export through the Khor Al Amaya which includes the cost for completion of topsides restoration, jacket substructure inspection and repair, and inspection and repair of 2 No. 30-inch pipelines. The schedule for making Khor Al Amaya operational is 4-6 months.

- The OPEX for Khor Al Amaya must include for tugs and supply boats and for 80 personnel which is the current head count to operate the Mina Al Bakr Terminal (Ref. 1). The terminal will be in operation for 8-10 months.

- The pipeline work is estimated to require a similar time to engineer, procure and install as the SPMs, i.e., 12 to 14 months.

- Delivery schedules have been received from FMC and SBM and the two new SPMs and PLETs (Pipeline End Termination).The delivery schedules ranged from 12 to 14 months including on site installation and commissioning. A delivery schedule has also been received from FMC for a new unused SPM CALM buoy that is currently available in Abu Dhabi that could be made suitable for the Mina Al Bakr export requirements. The delivery schedule would be four to six months. Although this is a shorter delivery schedule, the pipeline is on the critical path at 12-14 months.

• The yearly OPEX for two new SPMs includes tugs, one supply boat, and installation of hose replacements.

• In the event of insufficient storage tank capacity onshore, a floating storage and offloading (FSO) unit will be rented.

2) **Best Case.** In the event of minor damage to Mina al Bakr, two alternatives were investigated:

a) Alternative No. 1 Replace Non Operational Equipment with New Equipment.

(1) **Viable Option.** This alternative will allow offloading of approximately 2.8 MM BPD at two operational berths located at Mina al Bakr on Platform A and Platform B based on a 20 hour per day vessel loading time. Two 16" loading arms are currently operational at 2 No. berths, each with a capacity of approximately 1.0 MM BPD. A third loading arm at each operational berth is not currently in operation. These 2 No. arms should, if possible be made operational. In the event these arms cannot be made operational, they should be removed and replaced with 2 No. operational arms from other berths at Mina al Bakr or the Khor al Amaya Terminal

The 2 No. 48" OD pipelines from Al Faw were designed for 3.36 MM BPD. The throughput in the UN Report (Ref.1) for each subsea pipeline was 2.16 MM BPD.

In the event of minimal damage to the topsides and the assumption that current conditions are similar to observations contained in the UN Report (Ref. 1), non operational equipment will be removed and replaced with new equipment as contained in the UN Report (Ref. 1) . Equipment included in the list includes , 2 No. Hydraulic Packages for the operation of 3 No. loading arms at Berth 1 and 3, 2 No. Generators, 1 No. Diesel Firewater Pump and associated Diesel Tank, a 20 Man Living Quarters and miscellaneous equipment including communications, firefighting, life saving and navigation aids. All equipment needs to be electrically compatible with existing equipment. Non operational metering stations will not be replaced. New metering will be installed at Al Faw.

This alternative will require a detailed survey to determine the condition of the topsides and confirmation of operability and safety for all systems. Based on the results of the survey, new equipment requirements will be confirmed and augmented as required. Bulk materials will be ordered based on a rectification plan.

A diver survey of the substructures will be completed. This survey will include checks for tubular wall thickness, cathodic protection and a survey of the 48" OD risers and clamps on Platforms A and B. Based on the results of the survey, a rectification plan will be developed and bulk materials will be ordered for any required repairs.

The work also includes disconnecting non operational equipment as per the equipment list, lifting off the equipment, lifting in new equipment and reconnection and commissioning of the new equipment. This would include removal of 2 No. loading arms and installing 2 No. existing loading arms from the Khor al Amaya Terminal.

It should be noted that this option also carries an additional OPEX cost for the 80 personnel working at the terminal (Ref. 1) and the cost of tugs and supply boats required to handle tankers and maintain supplies to the terminal.

The total cost of pursuing this alternative will be dependent on what is found during the topside and substructure surveys at Mina al Bakr.

b) Alternative No. 2 Install two new SPMs near Mina al Bakr.

(1) Viable Option. For the SPM Alternative, crude will be exported through the Mina al Bakr Terminal for approximately 1 year after insuring a safe operation. Non operational equipment replacement would include 2 No. hydraulic packages for the operation of 3 No. loading arms at Berths 1 and 3, installation of spares for the loading arms, 2 No. generators,1 No. diesel firewater pump and associated diesel tank, a 20 man living quarters and miscellaneous equipment including communications,firefighting,life saving and navigation aids.The replacement of non operational equipment will include lifting off the equipment with a lift barge,lifting in new equipment and reconnection and commissioning. Non operational metering stations will not be replaced. Metering will be installed onshore at al Faw. The terminal will be shut down after installation of the SPM's. The pipeline procedures will be the same as for the major damage scenario as shown below:

(a) Empty the pipelines of oil by applying the following procedures to each pipeline:

- Use a diving spread "hot" tap to plug the pipeline near the terminal. The pipeline will likely be filled with oily water at this location.
- Tap the pipeline just shoreward of the plug and install a tee, valve and flange.
- Install a hose from the flange tee to the surface where it will empty into an oil transport barge or tanker.
- Drive a pipeline dewatering pig from the onshore end of the pipeline toward the terminal emptying the displaced oil into barges or tankers. Pig should be driven with nitrogen.
- Prior to and while pigging the pipeline, carry out a visual observation of the pipeline route as described below in the section Assessment of Pipelines Offshore to locate leaks.
- The pig will travel until the lead cup passes the tee. At this point water is no longer being removed from in front of the pig and it will stop. Nitrogen will now be produced through the hose.
- Close the valve on the tee and maintain low pressure on the pipeline to prevent water ingress at any point. Remove the hose.

(b) Prepare the ends of each pipeline for continuation to SPM locations:

- If the pipeline is buried, jet soil away from the pipeline to free it for lifting off the seabed.
- Cut the pipeline just seaward of the plug.
- Using a pipelay or combination pipelay heavy lift construction barge lift the pipeline to the surface.
- While holding the pipeline in davits above the water cut off the end of the pipeline containing the plug, pig and tee.
- Install a laydown head on the end of the pipeline and lower to the seabed.

(c) Lay the continuation sections of each pipeline to the SPM locations:

- Recover the pipeline through the pipelay stinger to the barge firing line.
- Stalk on and lay 48" pipe until the SPM location is reached. This will be on the order of a mile or more from the terminal platform. An equilateral triangle configuration between the pipeline tie ins and the two SPMs is envisioned with each of these three installations at a vertex of the triangle.
- Laydown the 48" line. Recover it in the davits to the side of the barge and install the SPM manifold. The manifold will have a straight through passage to a 48" valve and flange on the end opposite to the incoming pipeline.

(d) Lay 48" connecting line between the two SPM locations.

(e) Trench pipelines consistent with existing 48" lines.

(f) Flood lines and install two connection spools between flanges on ends of the SPM manifolds and the connecting line.

(g) Clean, pig and hydrotest system per Section below, Repair / Replacement Options– Pipelines. This configuration can be pigged from a launcher onshore to a receiver onshore.

(h) Hook up SPM Hoses.

Budget/Schedule Considerations:

- This Alternative includes the cost of replacement equipment and resoration of existing equipment at the Mina Al Bakr Terminal.
- The OPEX for the Mina Al Bakr Terminal includes tugs, one supply boats, and 80 operations personnel (Ref. 1). The terminal will be in operation for approximately one year.
- The pipeline work is estimated at 12 to 14 months to engineer, procure, and install.
- Budget and delivery schedules have been received from FMC and SBM. For the 2 No. SPMs and PLETs (Pipeline End Terminations) the delivery schedules ranged from 12 to 14 months including on site installation and commissioning.

- The yearly OPEX for 2 No. SPM's includes tugs, one supply boat, and installation of hose replacements.

- In the event of insufficient storage tank capacity onshore, an FSO (floating storage and offloading) can be rented.

- The schedule for the minor damage case is 14 months for full production of a minimum of 2.0 MM BPD through 2 No. SPMs at which time the Mina al Bakr terminal will be shut down and decommissioned. A delivery schedule has also been received from FMC for a new unused SPM CALM buoy that is currently available in Abu Dhabi that could be made suitable for the Mina Al Bakr export requirements. The delivery schedule would be four to six months. Although this is a shorter delivery schedule, the pipeline is on the critical path at 12 to 14 months.

  After the Mina al Bakr Terminal is handed over, the two operational loading berths, Berth 1 on Platform A and Berth 3 on Platform B will be made safe. Non operational hydraulic packages at both berths for loading arm operation will be removed and replaced with two new units. Work will be done on Platform A first, followed by Platform B. Platform A, Berth 1 will commence loading two months after handover. Platform B, Berth 3 will commence loading three months after handover.

  Platform A, Berth 1 and Platform B, Berth 3 will continue loading at a maximum rate, depending on onshore production capabilities, for nine months.

  - Platform A will be shut in at the start of month 13 and throughput will be made through the first new SPM.
  - Platform B will be shut in at the start of month 14 and throughput will be made through the second new SPM.

  The 2 No. SPMs and PLETs will be procured, designed, fabricated, and transported to Mina al Bakr in 12 months.

  The first SPM and PLET will be connected to the first new 48" pipeline segment in month 13 after which production will commence. The second SPM and PLET will be connected to the second new 48" pipeline segment in month 14 after which production will commence.

  Three new 48", one mile, pipeline segments will be manufactured, coated and transported by cargo barge to the pipelay barge starting in month 11.

  - The first segment will be laid in month 11 to the first SPM.
  - The second segment will be laid in month 12 to the second SPM.
  - The third segment will be laid in month 13 between SPM 1 and SPM 2 to allow gauging and cleaning pigging to Al Faw.

Alternate 1 & 2 Comparison for Base Case Scenario 2

Based on the estimated CAPEX and OPEX costs, the SPM Alternative 2 is preferred.

3) **Assessment of Pipelines:**

a) **Assessment of Pipelines on Land.** See Tab F to this Appendix.

b) **Assessment of Pipelines Offshore.** Prior to using the either the two 48" pipelines to Mina al Bakr or the two 30" pipelines to Khor Al Amaya, BRS will conduct an inspection of the offshore pipelines. The inspection(s) can be performed according to the following procedures. A plan for more detailed inspection and repair, should the pipelines be leaking, is provided in the subsequent section on replacement repair options.

(1) Perform a visual inspection along pipeline route. This is most easily done by plane or helicopter. Look for oil slicks.

(2) Inspection should be performed at high tide if pipeline traverses tidal flats.

(3) Record the following information for any slicks observed:

(a) location of ends of slick or of boundaries in four cardinal directions if circular or irregular
(b) estimated surface area of slick
(c) orientation of long axis of slick if not circular or irregular
(d) direction of travel of slick if apparent (or note direction from narrowest end toward widest end if inspection interval insufficient to show motion)
(e) time of observation and prevailing weather conditions, e.g. directions of winds and currents, incoming or outgoing tide
(f) Vessel wrecks, ocean outfalls or other potential "non-leak" causes of slick.
(g) Any other relevant information

(4) If line was un-pressurized at time of initial inspection and no leak found was found, isolate the line and apply 20 percent of maximum operating pressure by injecting oil or water. Monitor pressure to supplement visual slick inspection.

(5) Repeat inspection.

(6) If no leaks are found, increase pressure to 60 percent MAOP, re-inspect and if OK increase pressure to 100 percent MAOP for final inspection.

(7) If at any stage a leak is found perform a vessel based inspection.

(8) For an un-pressurized pipeline a Remote Operated Vehicle (ROV) with underwater video cameras should be mounted on a suitable vessel and used to inspect the route. An alternative is to use divers to search in the vicinity of the slick for a leaking pipeline segment. Water jetting may be needed to excavate the line in the vicinity of the slick.

(9) For a pressurized pipeline, a vessel should tow an underwater microphone along route in vicinity of slick and listen. The sound can be used to further narrow the section of pipe to be visually searched.

(10) Information from the inspections should be used to assess the pipeline and recommend further detailed inspection or repair.

4) **Repair / Replacement Options – Pipelines:**

a) **Pipelines on Land.** See Tab H this Appendix. The extension of the 48-inch pipelines to SPMs is discussed in Tab I to this Appendix.

b) **Pipelines Offshore.**

(1) **Plan for Repair.** If leaks exist, develop a repair plan. A diver installed split sleeve, PLIDCO or equal, would generally be used to repair a short pipe segment. A diver repair spread or pipelay construction spread would be used to repair longer segments.

(a) Pressure or hydrotesting should be performed to prove the repairs successful.
(b) A detailed inspection plan should also be developed if reason exists to believe the pipeline has deteriorated and may develop a leak in normal operation.
(c) A detailed plan would cover removing oil and cleaning the line. Inspection pigs of increasing sophistication should be run. Typically this program might consist of a gauging pig, followed by a caliper pig and finally an electronic wall thickness measurement pig. A hydrotest would be performed to further locate leaks and prove repairs.
(d) A 24 hour hydrotest at 1.25 times maximum allowable operating pressure is recommended to re-rate or de-rate the pipeline.

5) **Offshore Pipeline Assessment and Repair Costs.** Estimated cost of preliminary inspections will vary depending on whether any leaks are found. Major cost elements would be provision of experienced inspection personnel, helicopter, pilot, fuel, pressurizing spread, pressurizing fluid, ground crew and any necessary transportation and housing. The crew would need to operate pressurizing spread and pipeline valving at both ends of the line.

Should leaks be found in the line, locating the leaks with a vessel based inspection would be more expensive. The cost would vary depending on the number of leaks, the severity of the leaks and the accessibility of the pipeline.

Should detailed inspection and repair plan be required it would cost significantly more. Inspection cleaning, pigging, and testing of the line will be required. Repair clamps may also require installation with a suitable diving vessel.

a) **Pipelines on Land.** See Tab H this Appendix.

6) **Terminal Instrumentation.** For the SPM alternate, for both the the major and minor damage scenarios, a new meter station will be required onshore. The station will consist of multiple turbine meters in parallel, one bank of meters for each 48" pipeline.

Meter Station Components in Addition to Meters:

- Flow control valves to balance flow through individual meter runs and control rate of ramp up and down of delivery to vessel.
- Meter prover for proving accuracy of each meter during loading process.
- Sampling system to provide representative sample of fluids delivered to vessel.
- Automated valves for selection of active meters and meters to prove.
- Pressure and Temperature Transmitters for each meter and prover for flow compensation.
- Control panel mounted in prefabricated building with necessary flow computers to provide proving reports and loading tickets.

4. **SERVICE AND SUPPORT.** See ANNEX I.

5. **COMMAND AND SIGNAL.** See Base PLAN and ANNEX H.

ACKNOWLEDGE

(b)(6)
BRS PGM, LOGCAP

OFFICIAL:
(b)(6) BRS D/PGM

TAB K (REGIONAL POWER GRIDS) to APPENDIX 2 (ENGINEERING) to ANNEX F (ENGINEERING AND CONSTRUCTION) to LOGCAP CONTINGENCY SUPPORT PLAN

REFERENCES. See ANNEX N, Appendix 4.

TIME ZONE USED THROUGHOUT THE PLAN. Iraq.

TASK ORGANIZATION. See ANNEX A.

1. SITUATION. See Base PLAN.

a. General Assumptions.

1) The 50 Hz power grid will be restored by others, and that BRS has no responsibility for power grid.

2) The BRS Primary Action Plan assumes BRS will receive necessary power at battery limits of each oil production/shipping facility from others.

3) The Rough Order of Magnitude (ROM) estimate for the Primary Action Plan is $0.

4) The availability of power is critical to the success of the CSP. In the event that others are unable to provide power in the time to meet the CSP schedule, BRS offers an **Alternative Action Plan** as described below. BRS will take no action on this alternative action plan unless directed by the PCO.

b. Assumptions for Primary Action Plan.

1) The regional electric power grid, and associated regional grid power sources, local to oil production facilities will be restored to operation at 50 Hz for ultimate tie-in to the National grid. This is considered critical to the overall suitability/support of restoration (e.g., at sites with moderate or partial damage). Further, preservation of the 50 Hz National grid is the most efficient path toward future downstream production development and energy optimization initiative.

2) Neither transmission lines nor generating stations on the National grid will be military targets. Therefore, damage will be limited to short lengths of transmission lines that are damaged or destroyed in a few localized areas. Further, some regional grid generating stations may require only minor or no repair to become operational.

3) A "50 Hz quick fix" regional grid restoration plan may be required or efficient to support existing or replaced 50 Hz auxiliary electrical loads at any pumping stations or GOSP units. This "50 Hz quick fix" regional grid restoration may include rebuilding portions of the existing distribution lines local to oil production areas or substituting an alternative electrical distribution system on a localized basis. It is believed that sufficient 50 Hz rental generators are available on the world-wide market early enough to power auxiliary production site loads in support of this approach. These new/rental 50 Hz generators will be located at or very near GOSP units where natural gas from high pressure separators will be available as turbine fuel.

4) Pumping stations and GOSP units (i.e., oil production facilities) with irreparable damage to pipeline shipping pumps and/or their drivers will be retrofitted according to a "60 Hz quick fix" plan. This plan will exploit the early availability of 13.8 kV, 60 Hz motor-driven pipeline shipping pumps identified by the U.S. Army Corps of Engineers (USACE). For these situations rental generators rated 60 Hz with adequate capacity, believed to be immediately available, will be installed to provide "60 Hz quick fix" electrical power to the damaged facilities. The typical worst-case damage result will be certain "60 Hz quick fix" restored facilities operating, at least initially, independent and disconnected from the 50 Hz regional power grid.

5) Most, if not all, of the large existing pump drivers are combustion turbines, and not electric motors.

6) If technically and economically feasible/advantageous, conversion of the "60 Hz quick fix" electrical system(s) at restored pumping stations and GOSP units for suitable connection to an ultimately restored 50 Hz regional grid with continued electrical operation of replacement pumps (and other equipment) is an acceptable option. A method for achieving this through 50/60 Hz frequency conversion is discussed below under **Frequency conversion benefits**.

7) Any 50 Hz electric power that is necessary to accommodate restoration of oil production/ shipment capability will be provided by Others to the battery limit of each GOSP, pumping station, or terminal. As directed by the Office of the Secretary of Defense (OSD), BRS has no resposibility for any part of the National grid.

c. **Assumptions for Alternative Action Plan.** This alternative action plan is for the restoration of a limited portion of the power grid servicing those oilfields critical to production goals, and not for the entire National grid. This limited plan was a specified task in the initial Statement of Work (SOW), and BRS still considers this a critical task.

1) The ROM estimate for the Alternative Action Plan is $100 million in the worst case and $72 million in the most probable case.

2) The ROM worst case estimate assumes damage conditions for the regional grids as follows:

a) All regional grid generating stations destroyed (requiring installation of sufficient "60 Hz quick fix" generation to serve all pipeline shipping pumps and sufficient "50 Hz quick fix" generation to serve existing auxiliary loads.

b) The equivalent of approximately 10 miles of transmission line, including towers/poles, out of commission in the immediate area of the southern Rumailah (north/south) fields.

c) The equivalent of approximately six miles of transmission line, including towers/poles, out of commission in the immediate area of the northern Kirkuk field.

These equivalent transmission line lengths are considered representative of what will need restoration in each local region to accommodate delivery of the "50 Hz quick fix" power as previously described.

3) Existing transmission lines local to the restored pumping stations and GOSP units are 132 kV (probable by one interpretation of the UN information). Although this is not a critical

assumption in terms of achieving the end objective of powering the oil supply system (i.e., other transmission voltages can be accommodated), it is the basis for the plan as described below.

4) Assessment operations for the regional power grid for oilfield electrification will proceed as soon as the associated area(s) are cleared for presence of the Assessment Team. Regional grid assessment will occur in concert/parallel with GOSP/pumping station assessment. Regional grid restoration engineering/design activities will immediately commence as sufficient field information is collected, in parallel with ensuing assessment activities.

5) Because of the unknown condition of associated equipment and systems, assessment and subsequent engineering/design and follow-on field remediation activities described below for the regional power grid are considered to be necessary essentially independent of COA conditions. However, the amount of work actually required will expand as the COA No. increases for the transmission lines, switchyards, and central (generating) stations to be assessed.

6) Restoration of the regional grid will be performed in phases with initial operations focusing on immediate restoration of local power distribution links and reliable electrical service in the vicinities of the Rumailah (southern region) and, slightly later, the Kirkuk (northern region) oil production fields.

7) Information on interconnected system performance of the power regional grid will be unavailable, out-of-date and/or inaccurate.

8) Depending on the timing of how events actually unfold and the personnel approved for the assignments, every attempt will be made to combine/integrate the activities of assigned personnel to maximize the efficacy of the effort for restoration of the regional power grids.

2. **MISSION.** See Base PLAN.

3. **EXECUTION.** See Base PLAN.

a. **Introduction.** The following sections dicuss the execution of an Alternative Action Plan for grid restoration. Some parts of this plan may have already been accomplished by Others under the Primary Action Plan. Should an Alternative Action plan become necessary for timely reestablisment of oil production, some or all of the following actions may need to be executed.

b. **General Restoration Strategy**. Efforts for assessment and restoration of the regional electric power grid are expected to proceed in three phases:

1) **Phase 1. Establishment of regional grid service for rapid electrification of oil production for the Southern (Rumailah) oilfields**. Restoration will be staged as follows:

a) **Phase 1a.** Rapid assessment of regional grid facilities, including generating plants, in the areas immediately around the oil production fields to determine the extent of repair/refurbishment needed and feasible (See Appendix 3 to this Annex) to promptly restore electrical service in these areas. These facilities include Al Basrah Thermal Power Plant (TPP) (BE 0445-00041), Al Basrah TPP Harth (BE 0445-00342), Al Basrah Transmission Station 132 kV (BE 0445-00466), Al Basrah Transmission Station SE 132 kV (BE 0445-

DJ0006), Umm Qasr Transmission Station 400 kV (BE 0445-00468), and Ash Shuaybah Transmission Station 132 kV (BE 0445-00281).

Depending on the outcome of these assessments and the extent of damage to oil production facilities determined by GOSP/pumping station assessment teams, the regional grid restoration will proceed based on implementing one or more of the following options:

- **Option 1. Use of Regional Grid Generators.** The regional grid power plants are operational, requiring only minor repairs to operational generation facilities. Transmission facilities interconnecting oil production loads to the regional grid generating stations and immediately linking the GOSPs, pumping stations, and terminals are mostly intact and operational with less than a total of 10 miles of transmission line damaged or destroyed. The National grid transmission system will be sectionalized to provide power only to oil production facilities or other approved loads. This option also requires that most GOSP/pumping stations have only minor damage and their turbine driven pipeline shipping pumps are operational. If this option is possible, the substantial cost of generator rental is eliminated. Natural gas lines and related fuel delivery facilities would be repaired as required.
- **Option 2. 50 Hz Quick Fix.** Regional grid power plants are not operational, but the GOSP/pumping stations and their turbine driven pipeline shipping pumps are operational. Some minor damage may have occurred to transmission facilities in the immediate area of the GOSP/pumping stations, but such damage is assumed to involve less than 5 miles of transmission line. This is the "50 Hz quick fix" plan as described in Assumption #3. For the resulting electrical configuration refer to Figures 1, 2, and 3.
- **Option 3. 60 Hz Quick Fix.** The regional grid power plants are not operational and the GOSP/pumping stations are heavily damaged. Turbine driven pipeline shipping pumps are not repairable. In this case a new GOSP or pumping station will be installed nearby. The readily available 60 Hz equipment would be used according to this "60 Hz quick fix" plan described in Assumption #4. The resulting system would operate isolated from the 50 Hz grid and the electrical configuration for this option is shown by the 60 Hz GOSP, pipeline pumping stations, and intermediate terminal one lines in Tab E, F, and G to Appendix 2 to Annex F.
- **Option 4. Hybrids.** Combinations of the above options are likely. In addition, depending on colateral damage and, therefore, time to reestablish service at GOSP/pumping stations a modification to the "60 Hz quick fix" might involve the use of a dedicated adjustable frequency drive (AFD) for each 60 Hz pipeline shipping pump motor, in combination with a 50 Hz system.

b) **Phase 1b.** More detailed assessment of the facilities identified as repairable in Phase 1a to determine equipment ratings (i.e., nameplate data) and other information required to enable engineered solutions.

c) **Phase 1c.** Further assessment of the southern regional grid and its generating facilities at least as far north as the An Nasiriyah generating station in the southern region and. (See Iraq: A Geographic and Resource Profile, RTT 90-10013, Defense Industries and Power Plants map). For this (1c) Phase, the goal is to determine not only condition of the regional grid facilities, including the type and status of controls for regional grid operation, but the broader distribution and rotating capacity to serve electrical loads in each oil production region.

2) **Phase 2. Establishment of regional grid service for rapid electrification of oil production for the Northern (KirKuk) oilfields**. Restoration will be staged as follows:

a) **Phase 2a.** Rapid assessment of regional grid facilities, including generating plants, in the areas immediately around the oil production fields to determine the extent of repair/refurbishment needed and feasible (See Section 1, Construction Execution Plan) to promptly restore electrical service in these areas. In general, the approach and options considered would be the same as described above for the southern oilfields (Rumailah).

b) **Phase 2b.** More detailed assessment of the same areas to determine equipment ratings (i.e., nameplate data) and other information required to enable engineered solutions.

c) **Phase 2c.** Further assessment of the regional grid and generating facilities at least as far south as the 'Samarra' generating station in the Northern region. (See Iraq: A Geographic and Resource Profile, RTT 90-10013, Defense Industries and Power Plants map). For this (2c) Phase, the goal is to determine not only condition of the regional grid facilities, including the type and status of controls for regional grid operation, but the broader distribution and rotating capacity to serve electrical loads in each oil production region.

3) **Phase 3. National Grid Restoration (Optional)**. This phase depends on the need/decision for BRS to perform grid restoration activities beyond the regions immediately local to oil production areas. This Phase 3 initiative further presumes the desirability of a fully restored National grid, in order to accommodate civilian/industrial/commercial (non-oil field production) loads and to realize sufficient grid capacity to maximize oil field/energy exploitation. With authorization to proceed, evaluation and restoration of the entire National grid will occur according to defined and approved priorities/schedule. This phase would include detailed assessment of grid condition, restoration/rehabilitation needs, rotating capacity, control means, and other factors related to reliable operation of a fully interconnected National grid. As directed, a proposed plan for Phase 3 grid assessment will be prepared by Engineering during and/or subsequent to other regional grid assessment activities.

c. **Major Activities.** The regional grid assessment/restoration effort proposed will consist of the following major activities:

1) **Field/Site Surveys and Testing.**

a) **Assessment Team Makeup.** A grid assessment team will be deployed consisting, as a minimum, of the following individuals in each team:

- Manager
- Electrical engineer having electrical equipment and system protection expertise
- Electrical engineer having transmission line expertise
- Civil/Structural engineer to assess the structural integrity of the transmission towers/poles and switchyard/other structures
- Rotating equipment engineer
- Senior electrician with high voltage certification
- Electrical Technician with high/low voltage equipment testing expertise

b) **Team Deployment.** It is expected that a single grid assessment team will be required for the southern (Rumailah) regional area for Phase 1. Grid assessment team(s) for the northern (Kirkuk) regional area will not be required until Phase 2. Additional teams will

be deployed during each phase depending on damage conditions and as required to support schedule objectives. With appropriate authorization, Phase 3 grid assessment will proceed immediately after completion of the Phase 2 assessment plan.

c) **Team Focus.** The initial activity of these teams will be to survey the transmission line(s) supplying the pumping stations and GOSP units to be initially restored, for both the Rumailah and Kirkuk oil fields to identify the exact location and condition of generating stations having capacity, or potential capacity with repair, to adequately supply the electrical loads of the stations and units. The operating status, fitness for operation, and repair/refurbishment needs of the generating stations and their associated fuel supply systems, switchyard equipment and overhead line systems will be determined. Site grid assessment teams will prepare detailed field notes, sketches, and other information required to support ongoing Phase 1 engineering/design efforts.

d) **Regional Grid Sectionalization and Reallocation of Salvageable Grid Equipment.** During this investigation the site survey teams will also locate and assess whatever sectionalizing switching means are available for suitably isolating the portions of the grid local to the oil field areas from the National grid. The team will note in their survey of the regional power grid and assess for possible reallocation, any equipment currently applied for other service (i.e. circuit breakers, transformers, etc.) that might be used for immediate restoration of regional grid service for oil field loads. Definition of electrical loads for each oil field area will be obtained in concert with the electrical engineering/design team working the restoration of these stations and units.

e) **Assessment Team Equipment & Supplies.** The site survey teams will be equipped with all necessary equipment and supplies to safely and completely conduct their assessment of the grid equipment and conductor systems. Such equipment/supplies will include, but not be limited to:

(1) All required safety materials/tools (arc flash protection clothing/gloves, tag/lock-out materials, rubber gloves/blankets, "hot-sticks", etc.)

(2) All necessary test equipment (insulation power factor testers, high potential testers, ohmmeters, voltmeters, calibrated current sources/timers, etc.)

(3) Electrical (insulated) bucket truck with outriggers with sufficient lift capability to inspect transmission line insulators, surge arresters, and other overhead apparatus.

2) **Engineering/Design**. Using input received from the regional grid assessment teams, BRS Engineering will determine the appropriate repair/restoration design.

a) **Execution Overview**. Initial efforts will concentrate on Phase 1 restoration in the Southern oilfield. Design will proceed based on the option selected during Phase 1a, rapid assessment.

Design drawings and other documents will be prepared to facilitate site Construction activities. Specifications and data sheets will be prepared for any engineered equipment identified for replacement or needed to otherwise make the regional grids suitable for full support of oil field production. Detailed cost estimates will be prepared as necessary restoration equipment/facilities and work is defined. All design and equipment ratings

will be fully confirmed by detailed calculations. In addition to construction drawings, specifications, and other Construction support documents, Engineering will prepare complete bills-of-material to permit, along with the equipment specifications/data sheets, purchase of the necessary materials and equipment needed for restoration.

Engineering and design activities will similarly continue once Phase 2 or further regional grid restoration/rehabilitation initiatives associated with increased oil production/energy optimization are defined/approved.

b) **Cost Estimates.** Three rough order of magnitude (ROM) estimates used the following assumptions:

(1) Worst Case
- National grid generation is not useable.
- Extensive power grid damage in South and North oilfields.
- Two 50 Hz generators provided in South oilfield with 10 miles of transmission line rebuilt.
- Two 50 Hz generators provided in South oilfield with six miles of transmission line rebuilt.

(2) Most Probable Case
- National grid generation is not useable.
- Repairs to power grid damage in South and North oilfields.
- Some additional 50 Hz generation added in South and North oilfields.
- One 50 Hz generator provided in South oilfield with 10 miles of transmission line repaired.
- One 50 Hz generator provided in South oilfield with six miles of transmission line repaired.

(3) Best Case Scenario
- National grid generation is useable and requires minimal repair and maintenance.
- Small amounts of power grid damage in South and North oilfields.
- No 50 Hz generators provided in South oilfield with five miles of transmission line rebuilt.
- No 50 Hz generators provided in South oilfield with three miles of transmission line rebuilt.

c) **60 Hz Solutions**

(1) **Severe Damage.** With severe levels of damage to rotating equipment at certain pumping stations/GOSP units, a "60 Hz quick fix" electrical restoration will be implemented (see Decision Map and associated one line diagrams under "Electrical" Annex F, Appendix 2, Tabs F, H, and I) in order to minimize the time oil production is lost. This "60 Hz quick fix" solution results in the need for rental of one or more LM2500 (or other appropriately sized), 60 Hz generators for each site at considerable cost.

(2) **Retirement of 60 Hz rental generators.** Once oil production resumes and restoration of the regional grid has sufficiently progressed to where the regional grid is available as a source of reliable 50 Hz power to initially (and, subsequently) restored sites, it may prove (significantly) more economical to abandon the rental generators as power sources for the large pump motors. At this stage two alternatives seem to be the most likely retrofits to avoid the continuing cost of generator rental.

- **Alternate #1.** With availability of natural gas re-established at restored sites, direct replacement of the pump motors with gas turbines. Connection of other site electrical loads to the 50 Hz regional grid. May require replacement or mechanical retrofit of 60 Hz site auxiliaries for operation at 50 Hz.
- **Alternate #2.** Installation of 50/60 Hz solid-state frequency converters at each site with a regional grid interconnection to supply all site electrical power at 60 Hz, while connected to the restored 50 Hz regional grid. Assumes the Phase 1c assessment information confirms the presence or ability to restore regional grid generating capacity sufficiently to support complete electrification of each fully retrofitted site.

(3) **Frequency conversion benefits.** For a regional grid restoration scenario where 50/60 Hz frequency conversion is possible, Alternate #2 should prove to be attractive. For example, at prevailing market levels for the converters, their cost could be offset by savings in generator rental in less than two years. With the 15 kV switchgear design being proposed for the restored 60 Hz facilities, interconnection to the regional grid through converters and associated transformers can be accomplished with almost no interruption of oil production. Further, reconnecting any such pumping stations or GOSP units to the 50 Hz regional grid would make future optimization/ enhancement of these sites easier and more feasible economically. No conversion of 60 Hz equipment is necessary and the frequency conversion equipment involved for Alternate #2 is proven technology. Finally, these solid-state frequency converters have bi-directional (reverse power flow) capability, which makes interim or permanent operation of 60Hz pumping stations/GOSP units as co-generation plants a possibility. This approach would be a modification to Alternate #2, immediately above, where the path forward requires expansion of regional grid generation beyond early oil production objectives, and would likely justify purchase of 60 Hz rental generators. Retention of the 60 Hz generators may, in fact, be necessary with this alternate to support starting of large, local pump motors.

(4) **Decision map.** Figure 4 shows the Decision Map for the process that will be used by Engineering to evaluate the economics of 60 Hz rental generator retirement (or purchase) options for sites converted to 60 Hz by "60 Hz quick fix" restoration. Figures 5, 6, & 7 show conceptual one-line diagrams for electrical services with 50/60 Hz frequency conversion for a worst-case condition of conversion at all pumping station/GOSP unit sites in the southern and northern fields.

(5) **Adjustable Frequency Drives (AFDs).** Another approach that would allow the use of 3500 HP, 13.2 kV, 60 Hz electric motor drivers for pipeline shipping pumps to be used on a 50 HZ power grid would employ the use of adjustable frequency drives (AFDs) to power the pump motors. The AFD would provide frequency conversion from 50 Hz to 60 Hz for the 60 Hz electric motor. The AFD would also provide a "soft start" for the 60 Hz electric motor, which would decrease the amount of generation required. The AFD could be used for flow control on the pipeline shipping pumps as well.

d) **Advanced Engineering Challenges/Solutions.** There are expected to be many engineering challenges associated with restoration of the regional power grid. Yet to be discovered, for example, are needs which will be addressed during engineering to evaluate, and likely correct the protective relaying and surge voltage/short-circuit protection adequacy of regional grid power equipment. In addition, the restoration endeavor will require detailed power system analysis of the regional grid for each stage of regional grid rehabilitation.

(1) **Steady-state and Dynamic Regional Grid Performance Studies.** To facilitate analysis of the regional grid electrical network, a computer model will be prepared to permit simulation of power system performance for every eventual regional grid operating configuration. These computer simulations are necessary in order to know the steady-state and dynamic performance of interconnected regional grid rotating machinery and the regional grid stability for all likely regional grid switching operations and other disturbances. The computer simulations will also confirm the ability of the regional grid to supply adequate voltage, frequency, and power (both real and reactive) to all connected loads. Needs for load-shedding (of non-critical loads) as well as suitability of all control system designs and switching equipment for load-shedding will likewise be confirmed by computer study.

The same computer models of the regional grid system will be used for the special task of correctly evaluating and solving any issues related to abatement of power system harmonics with the 50/60 Hz frequency conversion option that may prove most economical for near-term future restoration. Finally, the computer models will determine short-circuit duties throughout the regional grid system in order to establish fault interrupting adequacy of circuit breakers and other switching devices. The short-circuit duties will be used as the basis for regional grid system protective device studies to include relay co-ordination curves and the necessary relay settings to achieve proper system performance.

(2) **Analysis of Restored Production Sites.** For damaged oil production sites that might be converted to 60 Hz local power, computer simulation studies also will include performance appraisal of isolated generators with respect to their ability to maintain suitable voltage at load buses as well as during motor starting and other system disturbances. Any load shedding required to preserve local system operation will be determined and defined for inclusion in design. Computer calculations will be performed to confirm load delivery and short-circuit adequacy of all local site switching and other electrical equipment. Finally, selectivity of protective devices will be established and confirmed by coordination curves.

(3) **Globally-unique Electrical Expertise.** BRS is uniquely prepared to address both design and power system analysis challenges of regional grid restoration, being the only known E&C firm world-wide having dedicated specialists with acknowledged expertise in the power system analysis field. This expertise gives BRS the exclusive ability to perform all of the power system studies mentioned above in-house. The capability of these specialists within the BRS Electrical Technical Services Group (ETSG) is more fully described in **Enclosure 1**, "Power Systems Analysis and Special Consulting Services".

3) **Construction** of defined remedies/grid tie-in to oil production facilities.

a) **Execution**. Construction will perform the regional grid restoration work as defined by the engineering drawings and other Construction support documents. Scope of this work will be defined during assessment.

4) **Operation** of the regional grid power stations and transmission system.

a) **Plan**. Once the regional grid or a portion of the regional grid is restored and commissioned for use, we will prepare for its effective operation. BRS will develop a grid operating plan for regional , or (if directed) a national grid operation depending on outcomes. Regardless, the operating plan will be tailored to actual regional grid design/restored status and will address all pertinent issues associated with reliable regional grid system operation. Depending on the complexity and geographical expanse of the restored regional grid, such issues may, among other considerations, include the following:

- System management/administration
- Load scheduling/dispatch/shedding
- Resource allocation/alternatives
- Energy optimization/balancing
- Adherence to system limits/tolerances (thermal, voltages, frequency, stability, etc.)
- Source utilization/cycling
- Switching procedures
- Control strategies
- Facilities operation/engineering support/service

In the case for a restored regional grid powered by existing generating stations, the task of resourcing personnel for regional grid operation most likely will scale down to the acquisition and deployment of central (generating) station operators, station engineering personnel and station/grid system service and maintenance personnel.

For either the "50 Hz quick fix" or the "60 Hz quick fix" all new/rental generators will be located and operated at restored GOSP units.

b) **Staffing**. BRS will create the necessary procedures and define the organizational structure required for operation of the power stations and transmission facilities to the oil production fields. BRS will also identify, organize, and deploy qualified personnel for all roles. Many of the operating procedures developed will be determined from the results of the power system computer simulations for the regional grid and analysis of those results, to be performed as described in the Engineering/Design section, immediately above.

Personnel with the appropriate skills to operate the gas turbine generators used in the "50 Hz quick fix" or the "60 Hz quick fix" will be recruited and assigned to the new power generation facilities at or near a GOSP unit.

Whatever the scale of the final regional grid operation initiative, every attempt will be made to identify and use local personnel with the necessary skills for all defined roles. If HCN personnel cannot be obtained, attempts will next be made to acquire the skilled personnel necessary in near-by, third countries, followed lastly by the use of U.S. ex-pats. This last option most likely would involve the use of sub-contractors normally engaging in the business of power plant operation and, in the case of a larger regional or National grid; subcontractors of the type with proven performance in U.S. Regional Transmission Operation (RTO) will be identified.

d. Figures. Figures 1 – 7 (pages 12-18) illustrate the BRS power grid solutions.

Figure #1
One-Line Diagram
"50 Hz Quick Fix" Restoration
South Rumailah Region

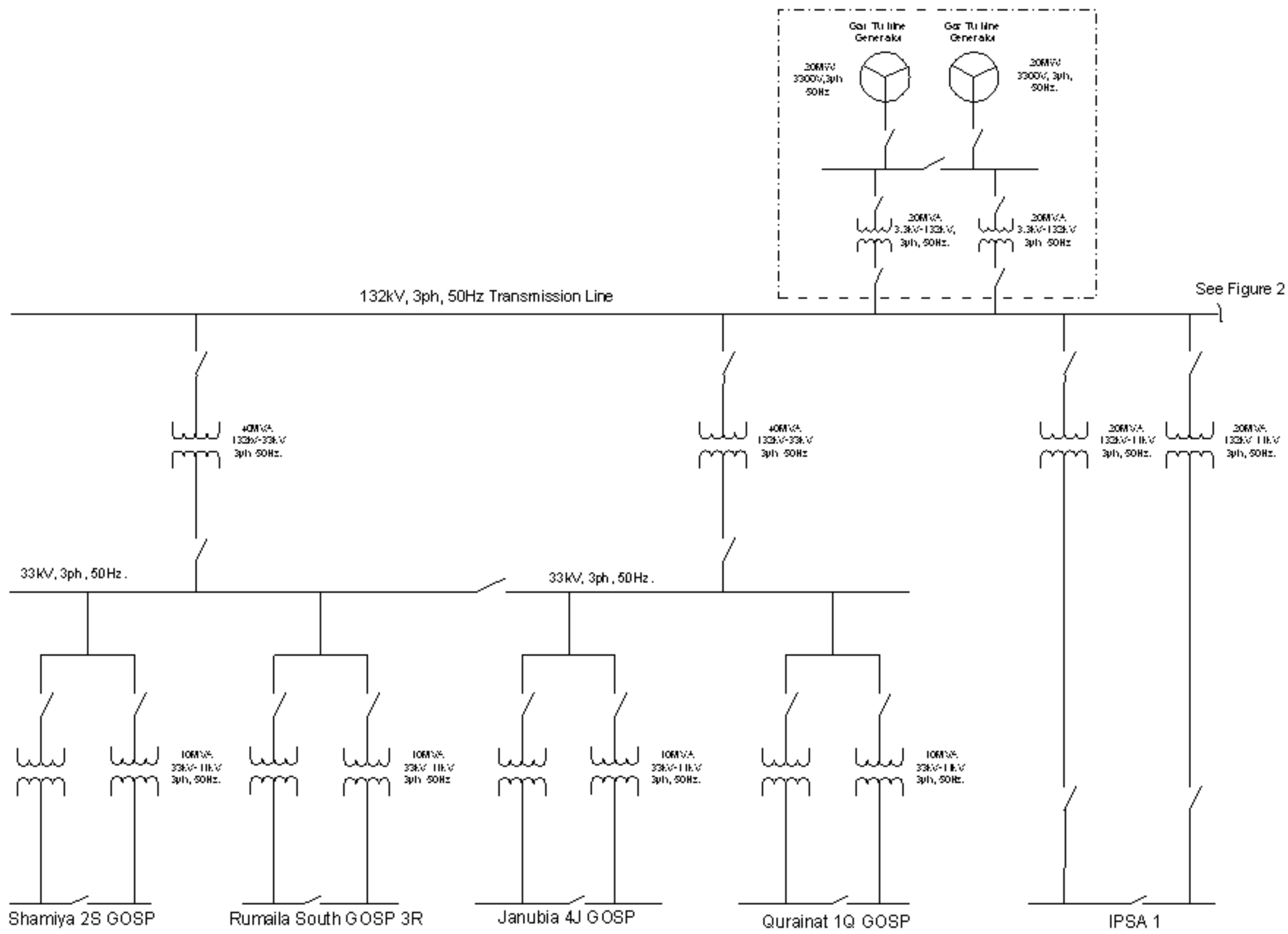

Note: Pipeline Main Shipping Pumps are assumed to be Turbine Driven or operating power being supplied by the local 60 Hz. "quick-action" Generators.

Transformer sizes are minimum expected sizes

Figure 2
One-Line Diagram
"50 Hz Quick Fix" Restoration
North Rumailah Region

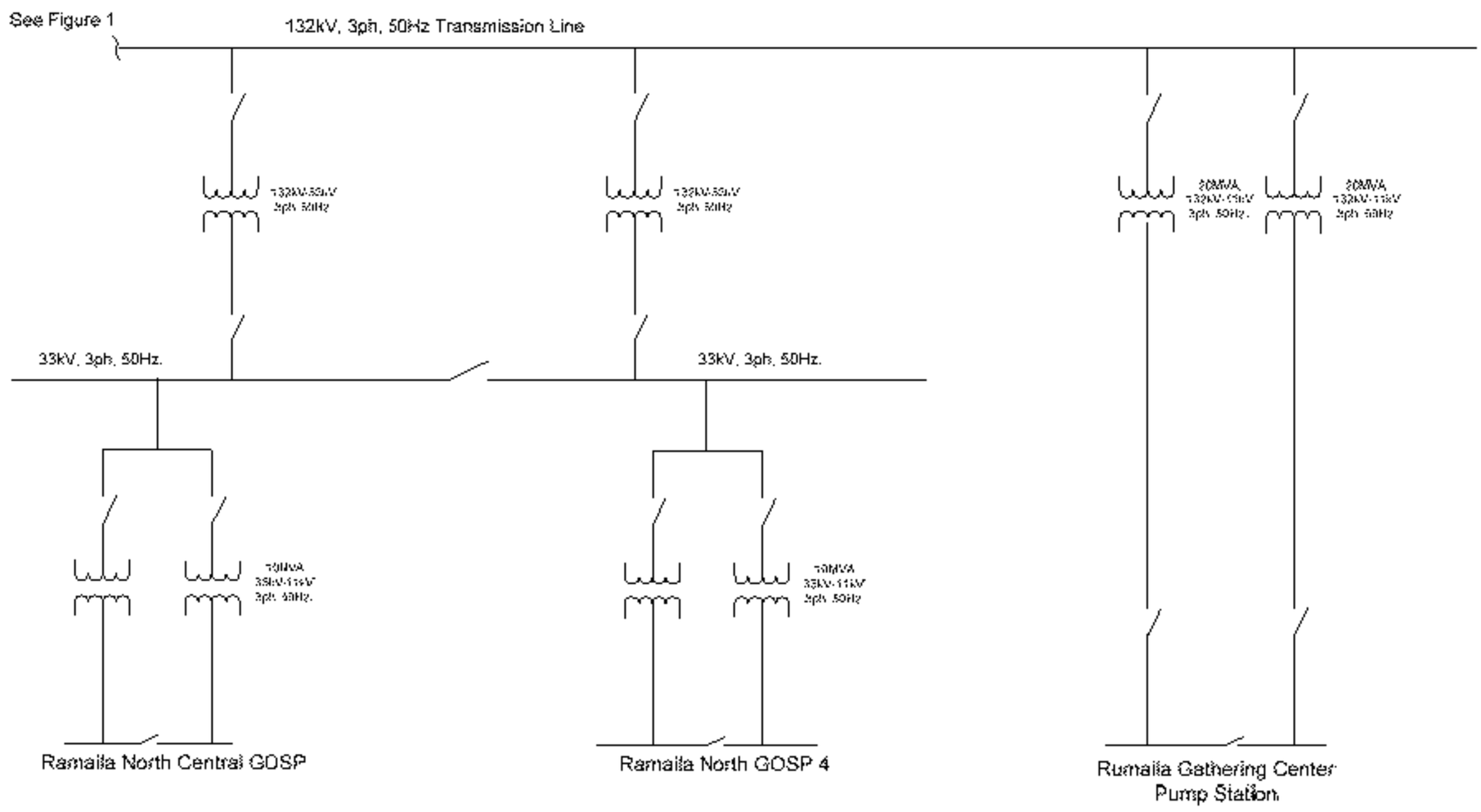

Note: Pipeline Main Shipping Pumps are assumed to be Turbine Driven or operating power being supplied by the local 60 Hz. "quick-action" Generators.

Transformer sizes are minimum expected sizes.

Figure 3
One-Line Diagram
"50 Hz Quick Fix" Restoration
Kirkuk Region

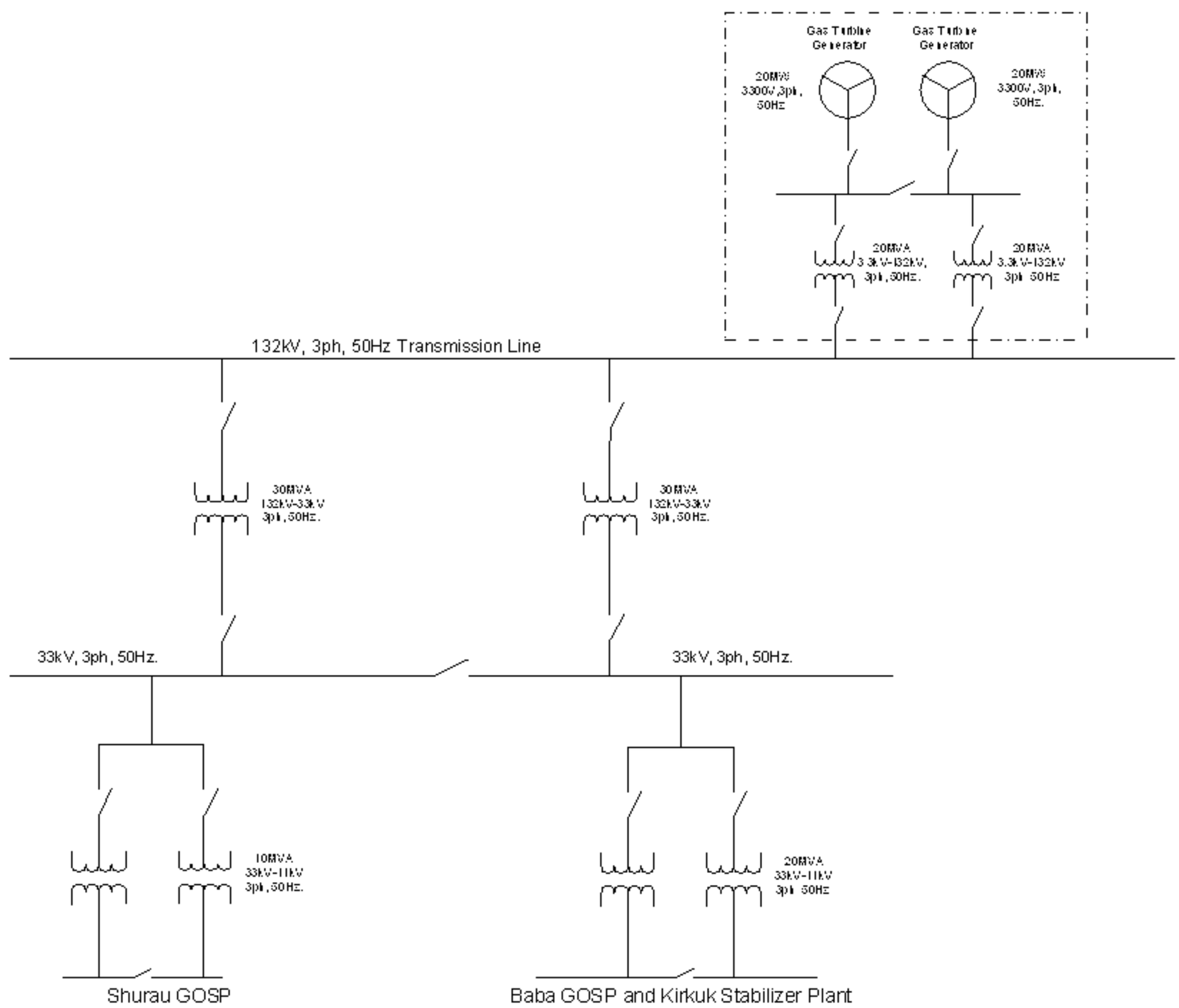

Note: Pipeline Main Shipping Pumps are assumed to be Turbine Driven or operating power being supplied by the local 60 Hz. "quick-action" Generators.

Transformer sizes are minimum expected sizes

Figure 4
Decision Map Diagram For
Economic Analysis Of
60 Hz Rental Generator Retirement

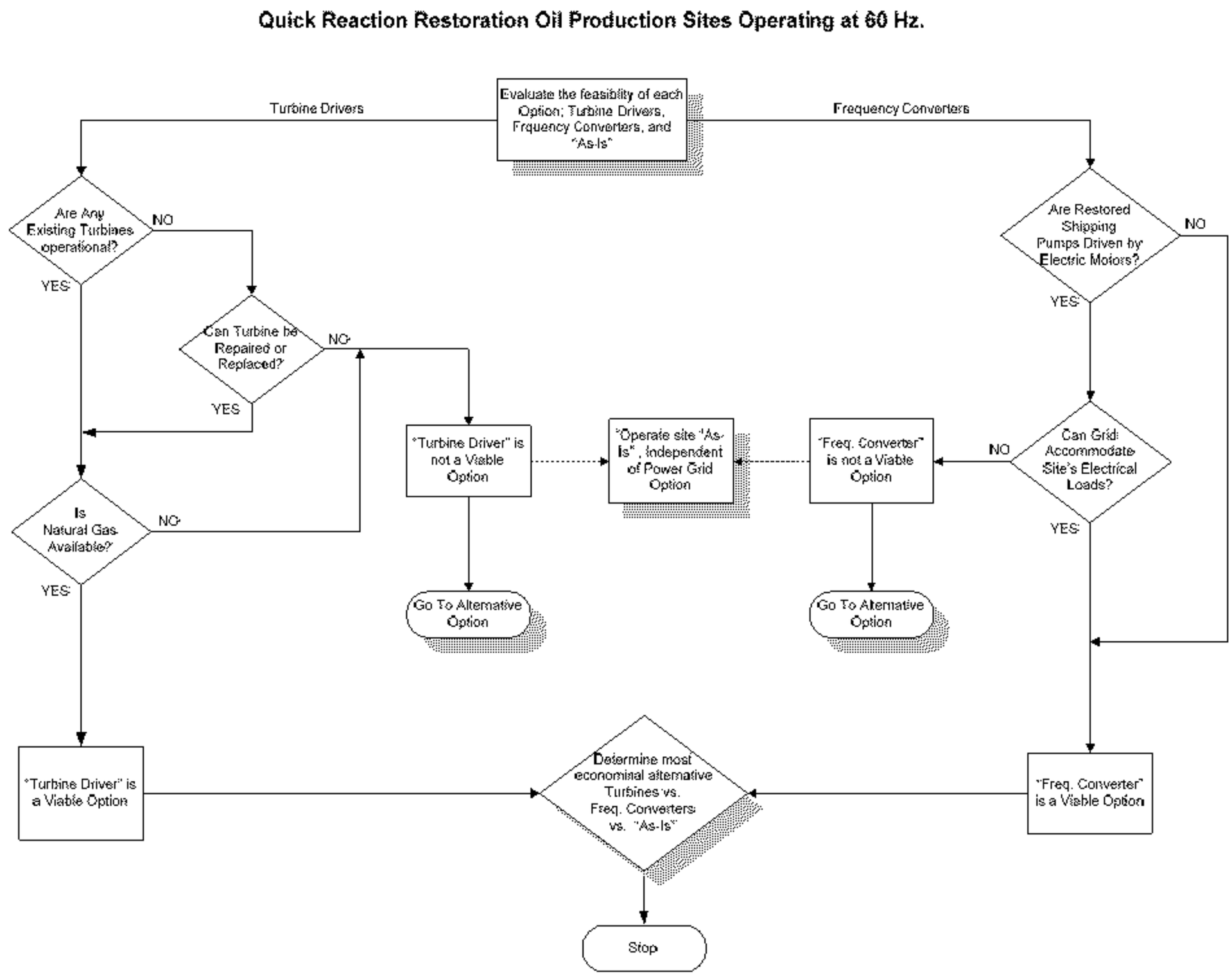

Figure 5
One-Line Diagram
50/60hz Frequency Conversion
South Rumailah Region

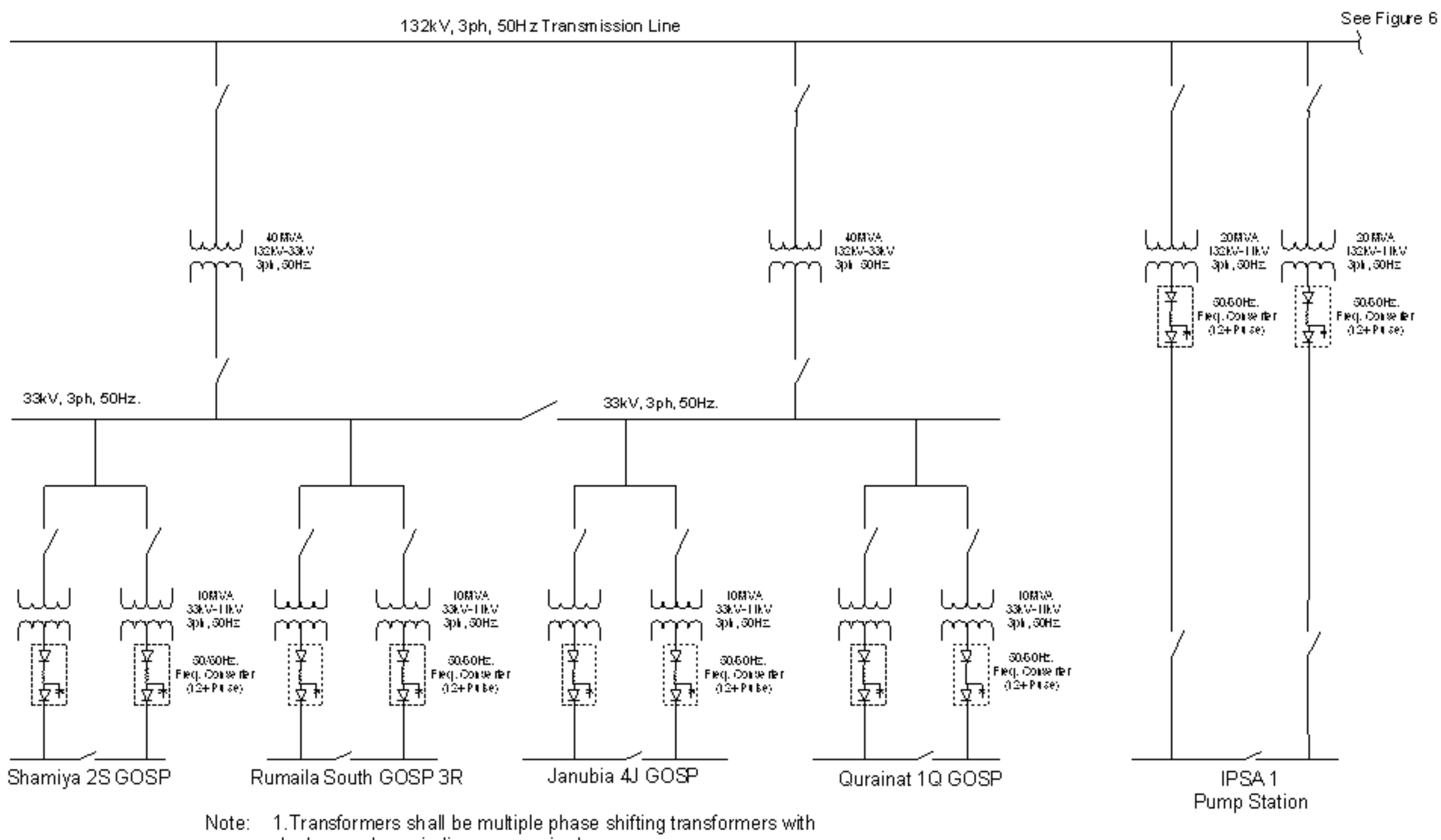

Note: 1.Transformers shall be multiple phase shifting transformers with dual secondary windings as required.

2.Transformer sizes are minimum expected sizes.

3. 60 Hz rental generators (not shown) may be retained for operation as a co-generation facility.

Figure 6
One-Line Diagram
50/60 Hz Frequency Conversion
North Rumailah Region

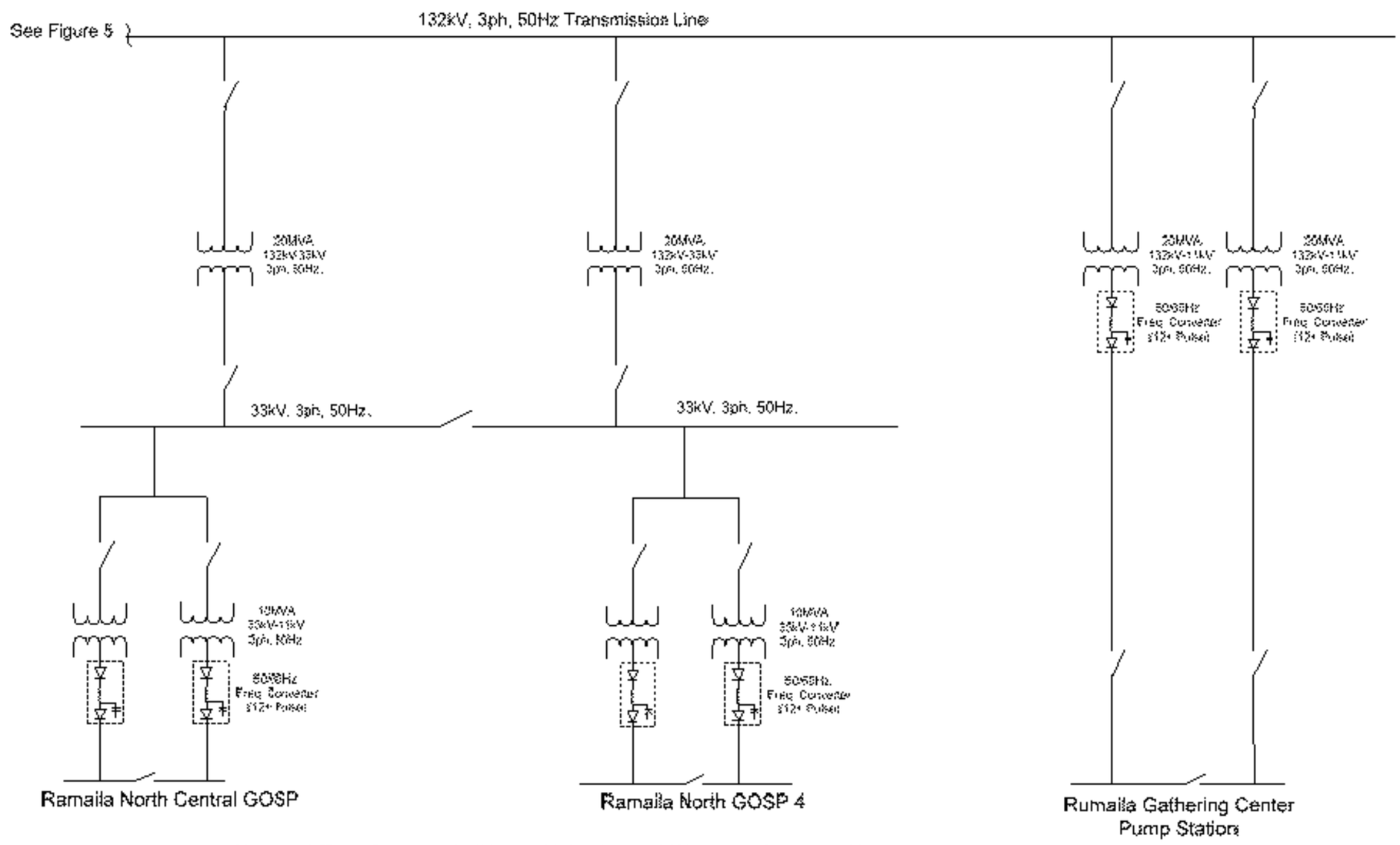

Note: 1.Transformers shall be multiple phase shifting transformers with dual secondary windings as required.

2.Transformer sizes are minimum expected sizes..

3. 60 Hz rental generators (not shown) may be retained for operation as a co-generation facility.

Figure 7
One-Line Diagram
50/60 Hz Frequency Conversion
Kirkuk Region

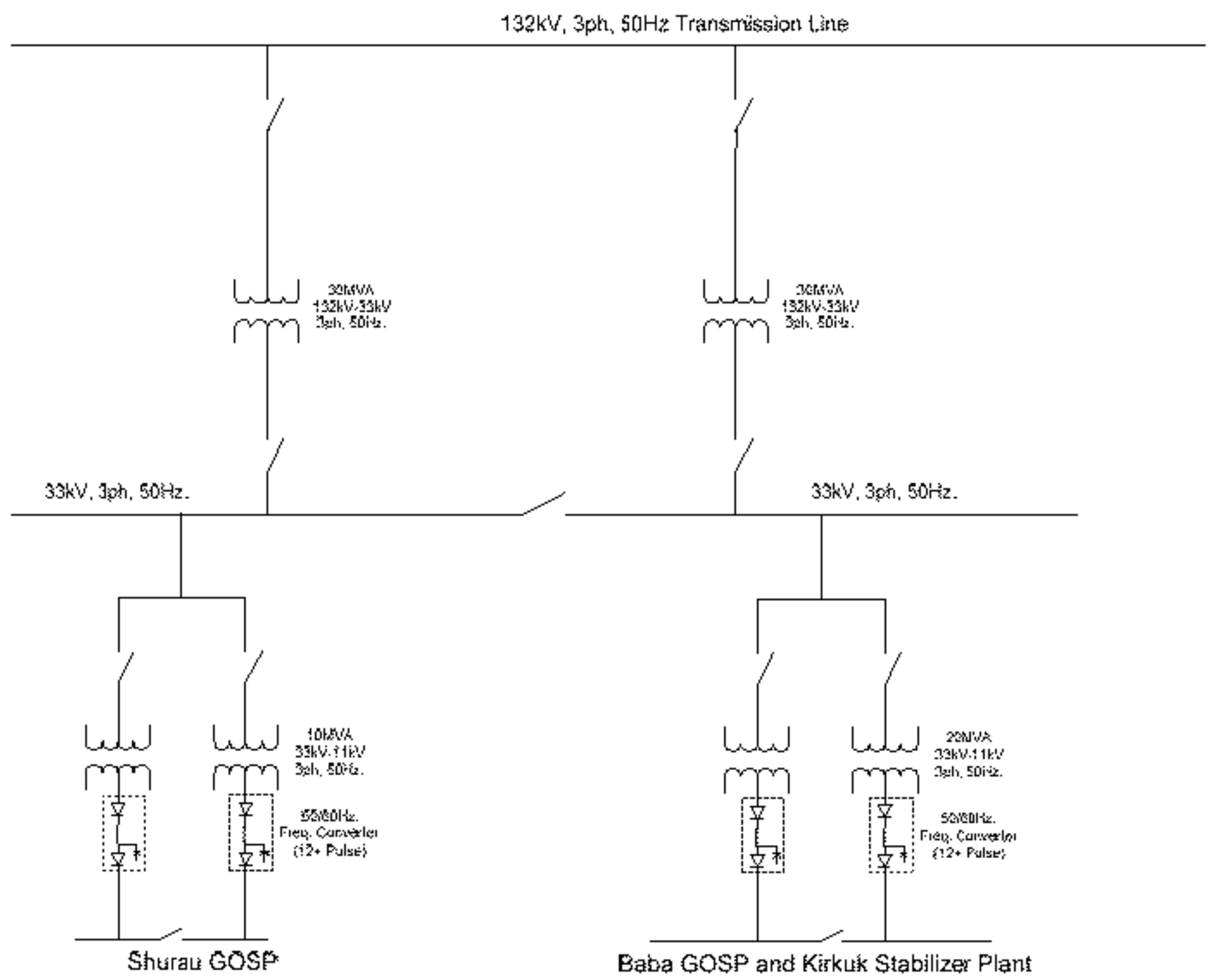

Note: 1.Transformers shall be multiple phase shifting transformers with dual secondary windings as required.

2.Transformer sizes are minimum expected sizes.

3. 60 Hz rental generators (not shown) may be retained for operation as a co-generation facility.

4. **SERVICE SUPPORT.** See ANNEX I.

5. **COMMAND AND SIGNAL.** See Base PLAN and ANNEX H.

ACKNOWLEDGE

(b)(6)
BRS PGM, LOGCAP

OFFICIAL:
(b)(6) BRS D/PGM

Enclosure 1 – Power Systems Analysis and Special Consulting Services

Power Systems Analysis and Special Consulting Services

Today's complex industrial electrical power systems require special analysis to establish they will perform acceptably. Kellogg Brown & Root has been a recognized leader in the field of power system analysis for over twenty-five years, contributing to or actually developing many of the standards and practices currently in use by industry. In addition, the Electrical Engineering organization at Kellogg Brown & Root is unique among E&C firms, differentiated by a staff of power system engineering experts, the Electrical Technical Services Group (ETSG). The ETSG can provide the full range of analytical engineering services essential for the effective planning, design, and reliable operation of even the most complex electrical power system. The engineering services which can be provided as either a stand-alone effort or in support of a multi-discipline project include:

- Power Distribution System Studies
- Plant Power System/Equipment Surveys
- System/Equipment Grounding Evaluations
- Tie Line (Watt & Var) Control/Load Shedding Systems
- On-site Power Systems Seminars

The Power Distribution System Studies mentioned above are used to predict the performance of a power distribution system. The studies determine the behavior of and the operating duties imposed on the electrical equipment and components applied within the system during normal and abnormal events. Such studies include:

- Fault Analysis / Breaker Application (Short Circuit) Studies
- Load Flow & Motor Starting Voltage Drop Studies
- Load Analysis Studies
- Protective Device Coordination Studies
- Motor Starting Torque / Acceleration Time Studies
- Grounding, Bonding, and Ground Mat Design Studies
- Transient Stability Studies
- Cable Ampacity Studies
- Lightning and Surge Protection Studies
- Harmonic Analysis Studies
- Reliability / Availability Studies

State-of-the-art computer based technology is employed in performing all these analytical investigations. Several types of power system studies are illustrated and a brief description of the studies available appears on the following pages.

Protective Device Coordination

Time-Current Curve

Time-current plots of protective device characteristics and equipment ratings provide graphical evidence that equipment is properly protected and protective devices are selective with one another.

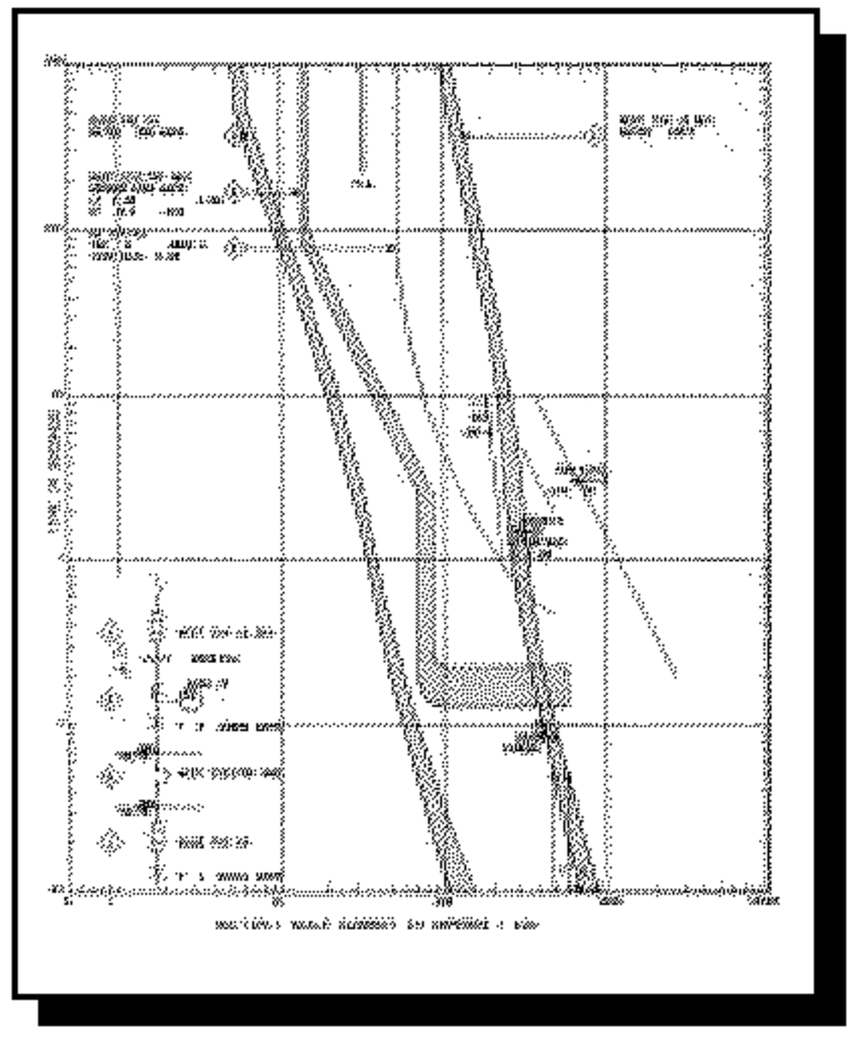

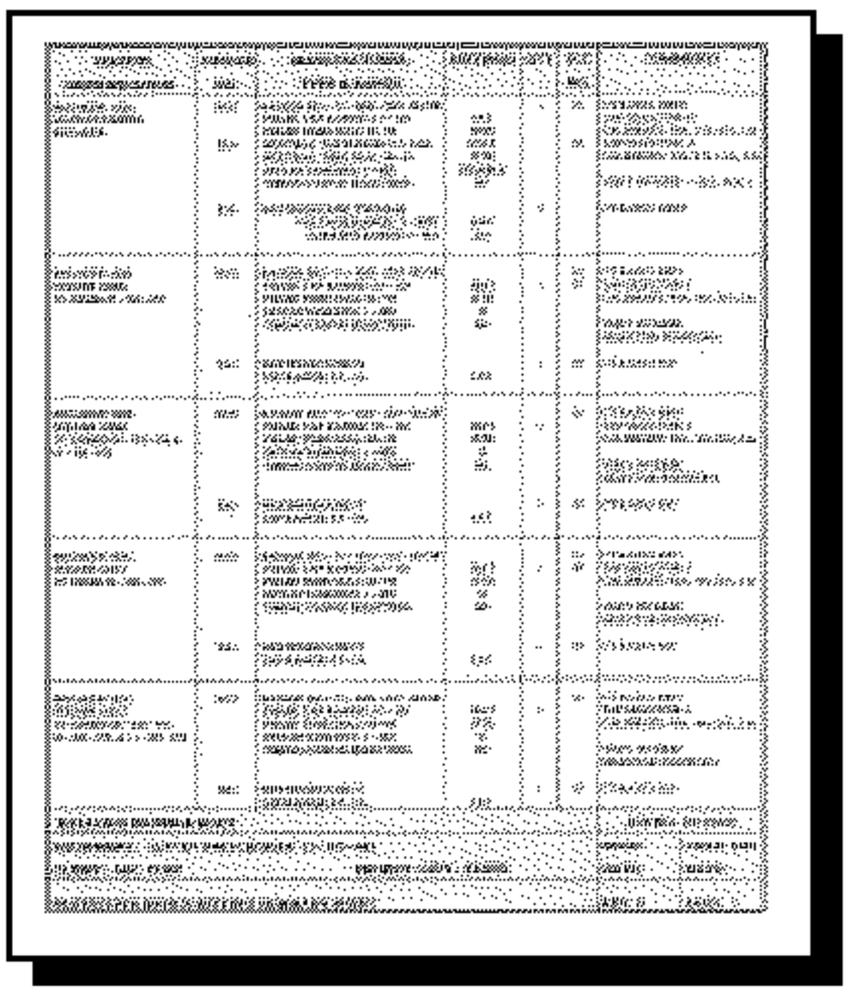

Device Setting Summary Sheet

Summary sheets provide a complete listing of the recommended settings and calibrating data for plotted protective devices along with the settings or ratings for all other protective devices in the system. These sheets greatly simplify and streamline the work performed by the field technicians setting the devices.

Short Circuit Calculations

The total short-circuit current and contribution from each circuit element complete with corresponding X/R ratios are calculated at each bus in the system. These values can be compared with the rating of the switching/interrupting devices to confirm that proper devices have been selected. Line-to-ground faults as well as three-phase faults can be evaluated.

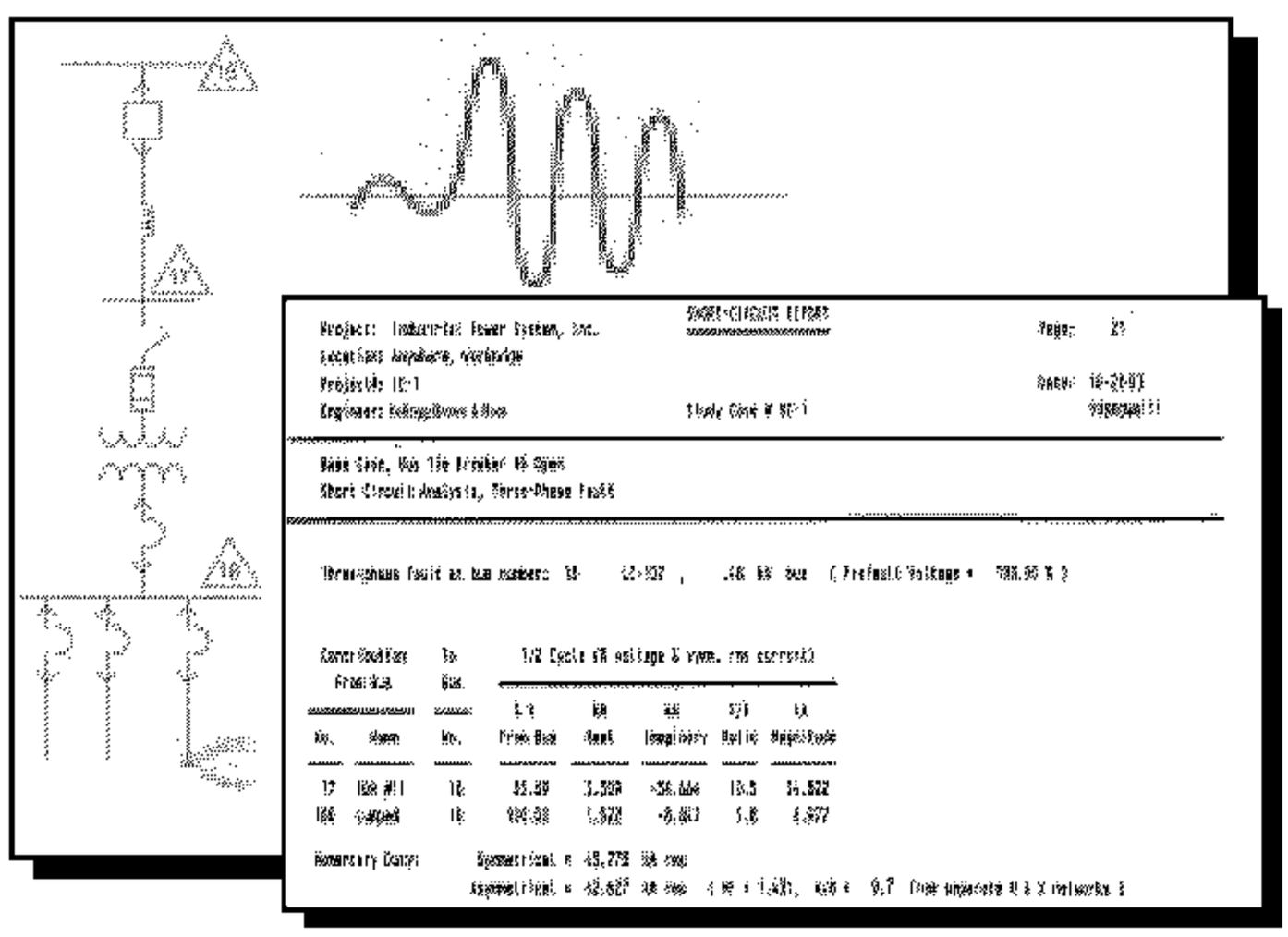

Ground Mat Potentials

For a given ground grid design and soil condition the mesh and perimeter touch voltages at the earth's surface are calculated and compared with tolerable (safe) touch potentials. The locations of dangerous voltage levels, where present, are precisely identified so that appropriate corrective measures can be incorporated into the ground grid design.

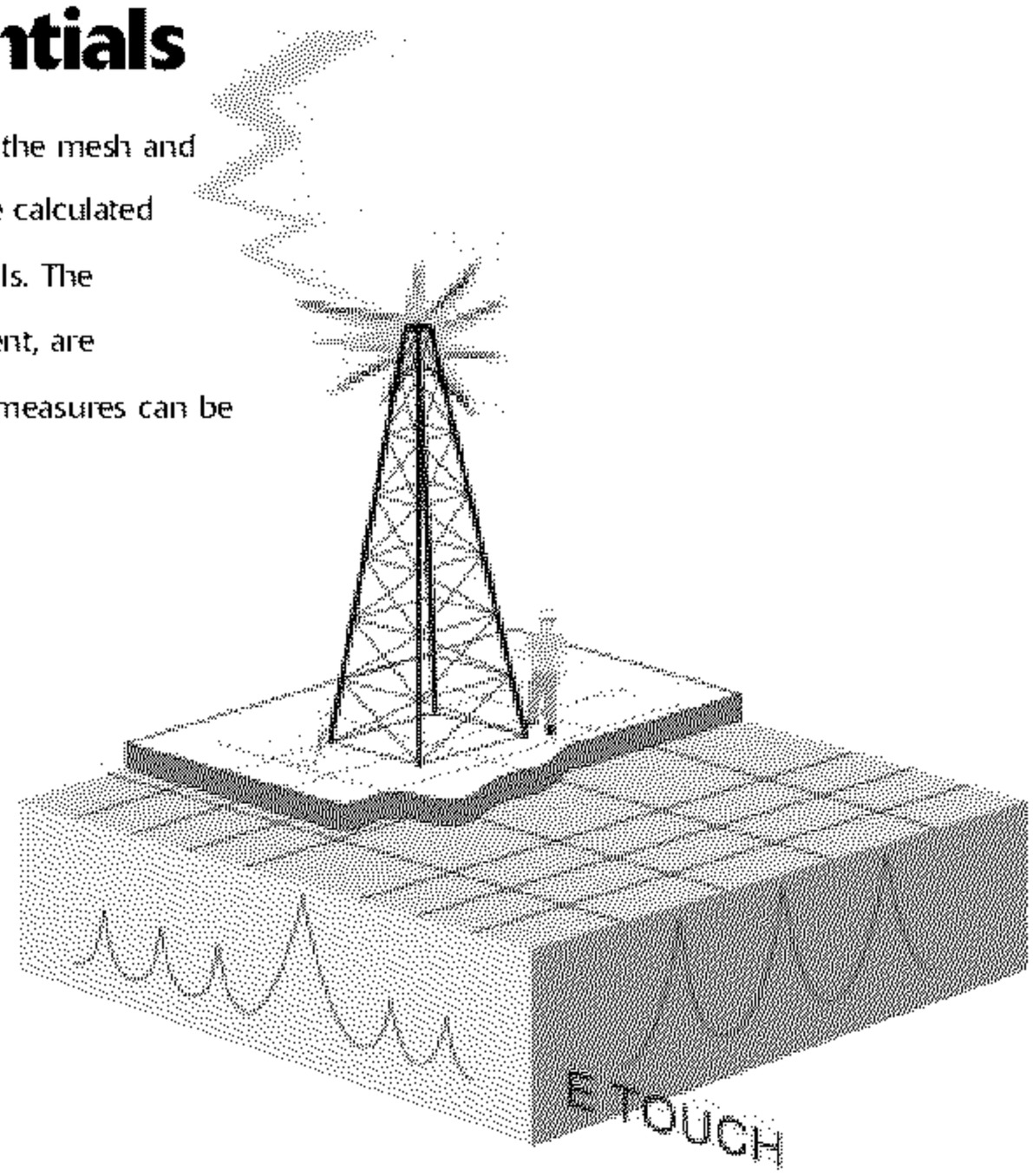

Transient Stability Studies

The dynamic response of prime movers/ generators and induction/synchronous motors can be modeled and system performance studied for user defined upset conditions such as faults, line or machine outages, step-load changes or motor starting. These studies will show whether the power system will regain operating equilibrium following the upset event. Results can be graphically represented by a plot of machine/system parameters with time.

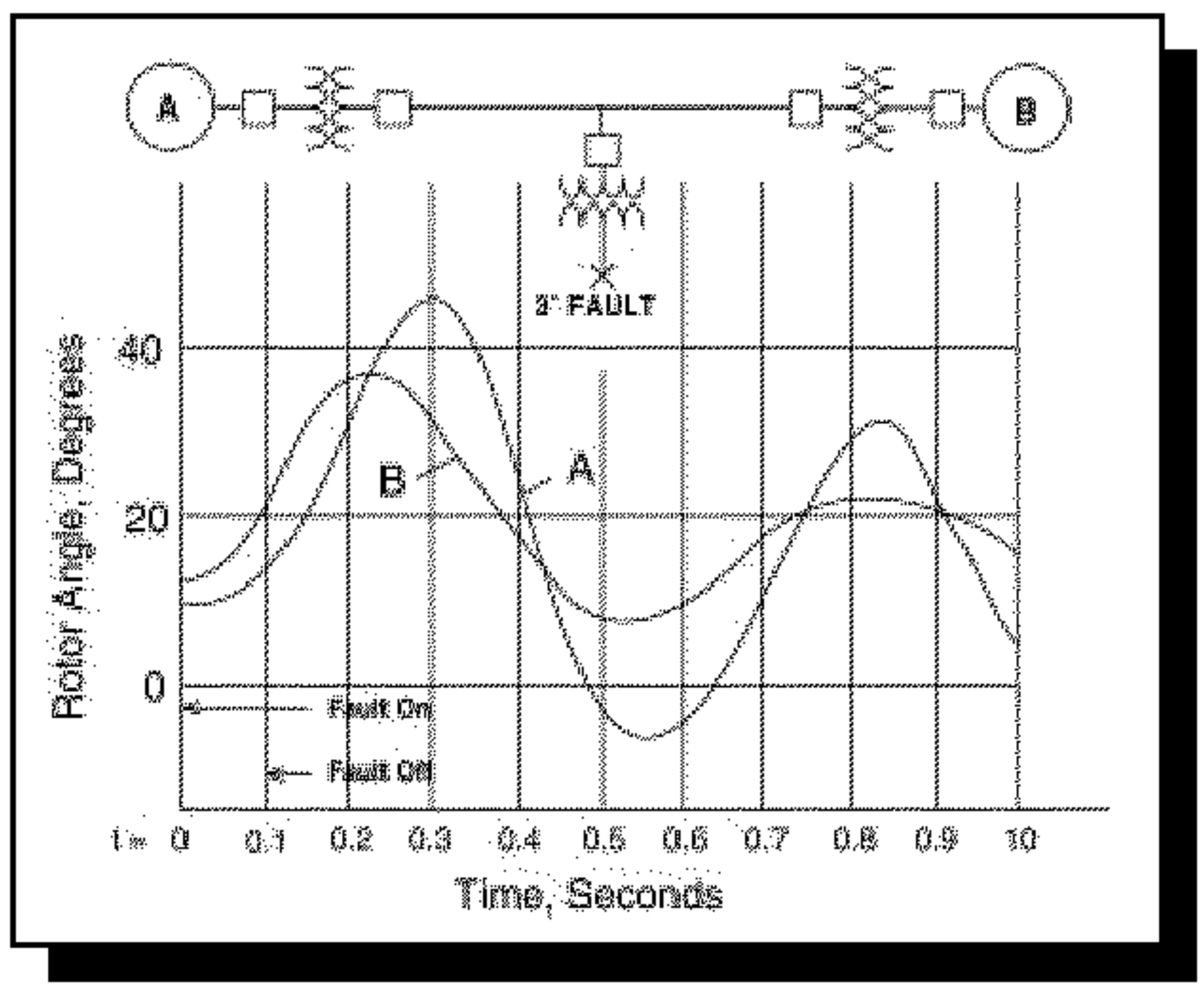

Electrical Power System Studies

Fault Analysis / Breaker Application Study
Calculates momentary and interrupting fault duties at every system bus per ANSI or IEC standards. Compares circuit breaker, fuses and non-fusible equipment ratings with imposed duties to identify any such devices having inadequate short-circuit capability.

Load Flow Study
Calculates the system steady-state bus voltages, kilowatt and kilovar branch loading for both motor and static loads. Accepts capacitors, off-nominal transformer taps and generator loading levels, and allows investigation of various operating modes. Reports provided on buses with abnormal voltages, branch loading / losses and total system loading / demand conditions.

Motor Starting Voltage Drop Study
Calculates the system voltage levels before and just after the impact of a motor being started, referred to as a "snapshot" voltage drop calculation. The instantaneous change in voltage at the motor being started and all other system buses may be determined.

Protective Device Coordination Study
Plots the time-current curve at specified values for each protective device applied on the power system. Prints a one-line diagram of the associated portion of the system on the coordination curve for the plotted devices.

Motor Starting Torque / Acceleration Time Study
Using motor and load inertia and torque values, calculates the motor voltage and torque values during the accelerating period, and determines the overall starting time of a successful motor start.

Ground Mat Design Study
Determines step and touch potentials to evaluate shock hazards in substations or other ground mat environments. Performs a detailed mesh-by-mesh analysis of the mat to precisely identify exact hazard locations and optimal design remedies.

Transient Stability Study
Using the dynamic characteristics of prime movers and synchronous machinery, calculates the response of these machines to various system disturbances and plots the machine variables with respect to time in order to reveal any unstable operating conditions requiring load shedding or other corrective measures.

Cable Ampacity Study
Calculates the ampacity or operating temperature of multiple cable circuits direct buried or in underground duct banks, using the Neher-McGrath calculation method.

Harmonic Analysis Study
With harmonic producing loads on a system having power factor correction capacitors: (a) calculates the system bus voltages, kilowatt and kilovar branch loading at various multiples of system fundamental frequency; (b) calculates the total rms voltage and current values at each bus so that unacceptable voltage distortion and the frequency where harmonic amplification exists can be easily identified; and (c) can be used to evaluate the effectiveness of harmonic filters and tuning reactors when non-linear (harmonic producing) loads are present with or without power factor correction capacitors.

Reliability / Availability Studies
Using known failure rates and outage duration times for electrical components: (a) calculates the statistical availability (expected percentage of up-time) of a power system; and (b) can be used for comparison of alternative system designs from an overall up-time stand point and to evaluate the worth of redundant circuit designs within a specific system.

Note: All Electrical Power System Studies conform to procedures and practices described in the latest version of IEEE Standard "Recommended Practice for Industrial and Commercial Power Systems Analysis," (The Brown Book) as well as all other related standards on the subject. Kellogg Brown & Root uses commercially available software programs to perform the calculation for these studies as well as for:

- Lighting (illumination) Levels
- Generator Sizing
- Electrical Heat Tracing

For further information, contact the Kellogg Brown & Root Manager, Electrical and Control Systems Engineering.

Kellogg Brown & Root
A Halliburton Company

Kellogg Brown & Root, Inc.
601 Jefferson • Houston, TX 77002-7990
P.O. Box 3 • Houston, TX 77001-0003
Tel: 713-753-2000 • Fax: 713-753-5353

© 1999 Kellogg Brown & Root, Inc. All Rights Reserved
Printed in U.S.A.

TAB L (INFRASTRUCTURE) to APPENDIX 2 to ANNEX F (ENGINEERING AND CONSTRUCTION) to LOGCAP CONTINGENCY SUPPORT PLAN

REFERENCES. See ANNEX N, Appendix 4.

TIME ZONE USED THROUGHOUT THE PLAN. Iraq.

TASK ORGANIZATION. See ANNEX A.

1. SITUATION. See Base PLAN.

a. Assumptions.

1) The scope of work encompasses only that infrastructure within the "battery limits" of the oil production facilties.
2) Major pipelines, which are considered part of the oil infrastructure, are addressed separately in Tab E to this Appendix. Shipping facilities covered in this Tab are limited to rail, trucks, and ships.

2. MISSION. See Base PLAN.

3. EXECUTION. See Base PLAN.

a. Concept of Operations. BRS will gather information relative to the availability, status, and condition of the infrastructure within the oil production facilities, and outline a program to execute repairs. BRS, on order of the PCO or designated representative, will execute repairs on the roads, rail, power, utilities, etc., in support of this plan.

b. Tasks. Provide information concerning the availability, status, and condtion of the infrastructure in the LOGCAP CSP AOR and to develop a program to execute repairs, if required. BRS will assess, design and execute the necessary repairs for the infrastructure associated within the oil facilities. The expected type of infrastructure within the oil producing facilities will consist of roads, rails, water utilities, water treatment, and electrical power.

c. Infrastructure Description

1) Well Sites. Typically well sites will have raised structural fill pads with unpaved acess roads. Generally the wells are located in the center of the pad and the infrastructure is limited to access roads.

2) Gas Oil Separation Plants (GOSPs). GOSPs generally consist of a separation plant, storage tanks, pump buildings, administration/operator buildings, emergency power units, flares, and water disposal ponds. The major infrastructure will be roads, electrical power, water supply and treatment.

3) Pump Stations. Typical pump stations consist of pipeline manifolds, tankage, pumps, and buildings. Infastructure associated with these facilities are roads, power, and water utilities.

4) Production Storage/Shipping Terminals. Production storage and shipping terminals consist of piping manifolds, large numbers of tanks, pumps, metering skids, buildings, and may

consist of truck loading/rail loading and marine loading. The typical infrastructure associated with this type of facilties are roads, rail, power, water utilities, and loading facilities.

5) **Refineries.** In general these facilities will consist of a large number of process equipment, rotating equipment, coolers, tankage, emergency power generation, various buildings, flares, water utilities and water treatment. Plant infrastructure will consist of roads, power, water utilities, and water treatment.

d. **Plan.**

1) **Assessment Team:** Soon after receiving a notice to proceed, the BRS advance team will move into the Event area to perform preliminary overall assesments including making a preliminary survey of the infrastructure elements requiring remediation. The objective of this survey is to gather only necessary information to efficiently plan for an EVENT response. Information required includes the condition of plant roads, plant rail, electrical power, water utilities, and water treatment. The extent of the assessment will be consistent for all expected scenarios and will vary in effort depending on the extent of damage to the subject facilities.

2) **Priorities of Work.** Priorities will focus on re-establishing plant access roads, restoring electrical power, and restoring water utilities in order to support the remediation work for the upstream facilities. Shipping terminals will be a high priority, as well, so that they can go on line as soon or before oil production is restored. Refineries will have a lower priority since they are on the downsream end of the production line.

e. **Execution.** Existing plant infrastructure may need restoration to a usable condition due to either collateral damage or normal deterioration. BRS will survey and analyze the conditions of existing infrastructure and will perform only the necessary repairs. In some cases, Infrastructure construction may require a new "from the ground up" system where no service currently exists, or extension of existing infrastructure, such as a road, to a new location. Types of infrastructure that BRS is prepared to construct or repair includes roads, rail, power, water utiltites/treatment and shipping terminals.

1) **Road Repair and Construction.**

a) BRS will inspect, maintain, and repair all roads, both paved and unpaved, under BRS responsibility. Repair and construction will be accomplished in accordance with PCO/ACO specifications. Both paved and unpaved roads will be inspected according to a schedule based on use and vulnerability to damage. Areas requiring attention will either be repaired immediately (if repairs are within the scope of PCO Task orders) or an estimate of the cost to repair will be prepared and submitted for PCO/ACO approval prior to initiating repair work.

b) BRS will maintain and repair earth surface roads in accordance with TM 5-624 and TM 5-822-4. Shoulders along roadways and the surfaces of graveled or other unpaved roads will be graded as necessary to maintain a smooth surface, protect the road edge, eliminate traffic hazards, and provide proper drainage. The BRS Planning and Scheduling Office will prepare a schedule for routine grading of unpaved roads, to include adding gravel as required.

c) BRS will provide plans for building or repairing roads to usable (or as specified by the PCO/ACO) condition. The plans will use Host Nation standards or plant standards as appropriate for the intended use. Painting, signs, and drainage will be included as appropriate. BRS may establish local subcontracts through a competitive value-based procurement process for major repair work. Minor repair, such as filling potholes, will be accomplished with Host Country National (HCN) employees.

d) For new road construction, BRS will either design-build the road or provide oversight of local firms under subcontract agreements.

2) **Plant Rail Repair and Construction.**

a) BRS will provide plant rail repair, as required. This may include removing and/or replacing, ties, rails, frogs, switches, and ballast. Grading and signal repairs will be included as appropriate for the rail standard. The designs will use Host Nation standards or plant standards on capacity and gauge based on anticipated traffic loads. Depending on the available resources, BRS may perform the rail repairs or may subcontract the design work and construction to a local firm.

b) For new rail construction, BRS will either design-build or provide oversight of local firms under subcontract agreements.

3) **Plant Power.** BRS will receive necessary power at battery limits of each oil production/shipping facility from others.

4) **Terminals.**

a) **Marine Terminals.** BRS will repair the facilities that are critical to the shipment of oil. Besides pipelines, a major portion of the oil exported out of the country is done via supertankers and therefore the marine terminal facilities play and important role. The major export terminals are located in the Persian Gulf. There are also many smaller oil terminal loading facilities scattered along major inland waterways which are used to load small coastal tankers. The smaller facilities will not be considered for repairs unless they are determined to be required in achieving the required export volume. BRS will repair or replace piles, decking, fenders, mooring fixtures, loading arms, and storage facilities as required. BRS will provide designs for repairing port facilities to their original condition or as specified by the PCO/ACO. The designs will use appropriate Host Nation Standards, and International Standards. Dredging and submerged obstacle removal will be included. Subcontracts will be awarded as necessary to local firms to accomplish the repair work.

b) **Truck and Rail Loading Terminals.** These facilities are considerd low priority and will be repaired as required to maintain internal consumption of oil products. Repairs include loading platform structures, buildings, loading arms/hoses, roads, and rails. BRS will develop plans, specifications and design/construct or manage the design/construct efforts of subcontractors under technical support agreements and design services contracts.

5) **Water Utilities.** No detailed information is available regarding the water utilities in each of the oil producing facilities. Assessment Teams will gather detailed information during visits

to the plants. Based on aerial imagery and locations of the plant facilities, it can be assumed that potable water is distributed to the plants from the national water supply grid. In this case repairs will be limited to the supply line and distribution network within the plant battery limits.

6) **Waste Water Treatment Repair and Construction.**

a) There is no information concerning wastewater treatment facilities at any of the GOSPs or terminals. Assessment Teams will gather detailed information during visits to these sites. Generally, a GOSP and terminals will contain a process sewer which drains to a corrugated plate insert (CPI) unit, and will have a sanitary sewer system and a small sanitary wastewater treatment plant for plant sewage. A storm water system will drain clean storm water off the property, however, in many dry areas the storm water is held in a storage facility and used for other purposes.

Analysis of aerial photos indicates that all liquid wastes separated from the oil are drained to open pits or lagoons, with no further treatment being provided. With this system the water is allowed to evaporate and the solids are left in the bottom of the pit.

The MARPOL treaty requires the treatment of ship ballast water at terminals. The gulf area is designated as a sensitive area under MARPOL and comes under some special provisions. It is not known if ballast water treatment facilities exist at the terminals. Iraq is not a signatory to the MARPOL treaty, however, the United States, and most, if not all, of its coalition partners, are. If not, ballast waters can be stored temporarily in a lined pit until ballast water treatment facilities are available. .

b) Wastewater plants will have to be repaired, rebuilt, or built for camps, GOSPs, and other associated facilities. BRS will repair storm water runoff systems or develop new ones. Industrial wastewaters from garages, maintenance installations, and industrial facilities such as pumps and compressors will require industrial wastewater treatment, primarily oil removal. These facilities will have to be repaired or, in some cases, built.

4. **SERVICE SUPPORT.** See Base PLAN, and ANNEX I.

5. **COMMAND AND SIGNAL.** See Base PLAN and ANNEX H.

ACKNOWLEDGE:

(b)(6)
BRS PGM, LOGCAP

OFFICIAL:
(b)(6) BRS D/PM

TAB M (CRITICAL MATERIALS LIST) TO APPENDIX 2 (ENGINEERING) TO ANNEX F (CONSTRUCTION & ENGINEERING) to LOGCAP CONTINGENCY SUPPORT PLAN

REFERENCES. See ANNEX N, Appendix 4.

TIME ZONE USED THROUGHOUT THE PLAN. Iraq.

TASK ORGANIZATION. See ANNEX A.

1. **SITUATION.** See Base PLAN.

2. **MISSION.** See Base PLAN.

3. **EXECUTION.** Critical Materials List attached. The list of and Rough Order of Magnitude for prepositioned equipment is provided at Annex R, Appendix 3, Tab A.

4. **SERVICE SUPPORT.** See Base PLAN.

5. **COMMAND AND SIGNAL.** See Base PLAN and ANNEX H.

ACKNOWLEDGE:

(b)(6)
BRS PGM, LOGCAP

OFFICIAL:
(b)(6) BRS D/PGM

Enclosure 1 – Critical Materials List

QUANTITIES															COST (X1,000)							
N. GOSP (2 total)	S. GOSP (9 total)	Typ Pump Station (4 total)	Rumaila Pump Station (1 total)	IPSA-1 Pump Station (1 total)	Mina Al Bakr (2 total)	STAB (2 total)	Total	DESCRIPTION	SIZE	DESIGN CONDITIONS	CAPACITY	Material	Budget Cost US$ (+/- 20%)	Lead Time (Wks ARO)	N. GOSP (2 total)	S. GOSP (9 total)	Typ Pump Station (4 total)	Rumaila Pump Station (1 total)	IPSA-1 Pump Station (1 total)	Mina Al Bakr (2 total)	STAB (2 total)	Total
				1			1	INLET MANIFOLDS	48" Inlets 2-36" Outlets 2-36"	300 PSIG @ 200F	1,575 MBD	(b)(4)	(b)	26	(b)							
			1				1	INLET MANIFOLDS	48" INLETS 1-42", 1-32", OUTLET 2-36"	300 PSIG @ 200F	610 MBD			26								
4	20						24	INLET MANIFOLDS	36" / 6" / 4"	API 5,000	300 MBD			26								
		4					4	INLET MANIFOLDS	INLETS 1-48" OUTLETS 2-36"	1100 PSIG @ 200F	1,500 MBD			26								
		4					4	OUTLET MANIFOLDS	INLETS 2-36" OUTLETS 1-48"	1100 PSIG @ 200F	1,500 MBD			26								
			2	2			4	DEGASSING BOOTS	12' (Dia) X 32'	150 PSIG @ 200F	750 MBD			16-20								
2	10						12	INLINE DEGASSERS	FUTURE	600 PSIG @ 200F	300 MBD			46								
2	10						12	HP SEPARATORS	14'(Dia) x 148'	275 PSIG @ 200F	300 MBD, Epoxy Caoting			46								
2	10						12	MP SEPARATORS	14'(Dia) x 148'	120 PSIG @ 200F	300 MBD, Epoxy Caoting			36								
2	10						12	TEST SEPARATORS	4'(Dia) x 15'	1440 PSIG@ 200F	22 MBD, Epoxy Coating			36								
2							2	1st STAGE DESALTERS	14'(Dia) x 148'	200 PSIG @ 200F	300 MBD Package 10% W/C/100,000 ppm Salinity			60								
2							2	2nd STAGE														
			1	1			2	STOCK TANKS	60' (Dia.) x 46'	ATMOSPHERIC	23,000 BBL			40								
						4	4	FEED DRUMS	14' (Dia) x 148'	200 PSIG @ 200F	300 MBD			26								
						2	2	STORAGE TANKS			50,000 BBL			40								
						2	2	STABILIZER COLUMNS	18' (Dia) x 80'	150 PSIG @ 650F, 25 TRAYS	300 MBD			52								
						2	2	FEED/BOTTOMS EXCHANGERS	Shell and Tube	200 PSIG @ 450F TUBES & SHELL	240 MMBTU/hr 60,000 ft2			32								
						2	2	STABILIZER BOTTOMS AIR COOLERS	8 -40 HP PER FAN	200 PSIG @ 450F	50 MMBTU/Hr 40,000 ft2			30								
						2	2	STABILIZER FIRED HEATERS		450 PSIG @ 650F	240 MM BTU/HR			56								
						4	4	STABILIZER HEATER PUMPS	400 HP	300 F PUMPING T/0.8 sp gr/7 cp	4500 GPM @ 100 PSI			36								
4	20	8	2	3		4	41	BOOSTER PUMPS	700 HP	WP II, 4000/60/3	22,000 GPM @ 40 PSI			52								
	20	16	4	7		4	51	PIPELINE PUMPS	3500 HP	MAWP-1100 PSIG @ 60 F, 13.2 kV	22,000 GPM @ 173 PSI			52								
2							2	DESALTER CIRCULATION PUMPS	50 HP		400 GPM @ 100 PSI			26								
2							2	DESALTER WATER PUMP	100 HP		800 GPM @ 100 PSI			26								
	10	4	1	1			16	GAS TURBINE POWER GENERATORS		LM 2500	20 MW			50								
1						4	5	GAS TURBINE POWER GENERATORS			2 MW EA.			60								
2	30	4	1	1		4	42	FUEL GAS CONDITIONING AND COMPRESSION			By Gas Turbine Supplier. Pkg will be furnished with GT Pkg.											
2	10	4	1	1	2	2	22	EMERGENCY POWER GENERATORS	25' x 9' x 9'	DIESEL DRIVEN	0.5 MW EA.			40								
2	10	4	1				17	INSTRUMENT AIR COMPRESSOR PKGS.	75 HP EA.	TWO COMPRESSORS	100 SCFH @ 150PSIG			20								
2	10						12	CHEMICAL INJECTION PACKAGES	10 HP	5 Chemicals, 5 Tanks, 10 Pumps	0- 25 GPH, Standard Capacity Day Tanks			30								
2	10	4	1	1		2	20	FIREWATER STORAGE TANKS	65' (Dia) x 60'	ATM. @ 140 F	30,000 BBL			40								
2	10	4	1	1	1	2	21	FIREWATER PUMPS	400 HP	12' x 12' x 7' H	2500 GPM @ 175 PSI			40								
2	10					2	14	WELLWATER PUMPS	20 HP		100 GPM @ 50 PSI (500 FT WELL)			30								
						4	4	STABILIZER FEED PUMPS	(b)		10,000 GPM @ 100 PSI			40								
						4	4	BOTTOMS RUNDOWN PUMPS			9000 GPM @ 100 PSI		(b)	40								
			1				1	GROUND FLARES			40 MMSCFD			26								
				1			1	GROUND FLARES			105 MMSCFD @ 1 PSIG			26								
4	20					4	28	GROUND FLARES			210 MMSCFD @ 75 PSIG			26								
2	10		1	1		2	16	FLARE IGNITER SKIDS			Included w/Flares											
2	10				1	2	15	SLOPS/DIESEL TANKS	20' (Dia) x 36'	ATM. @ 140 F	2000 BBL			40								

QUANTITIES															COST (X1,000)							
N. GOSP (2 total)	S. GOSP (9 total)	Typ Pump Station (4 total)	Rumaila Pump Station (1 total)	IPSA-1 Pump Station (1 total)	Mina Al Bakr (2 total)	STAB (2 total)	Total	DESCRIPTION	SIZE	DESIGN CONDITIONS	CAPACITY	Material	Budget Cost US$ (+/- 20%)	Lead Time (Wks ARO)	N. GOSP (2 total)	S. GOSP (9 total)	Typ Pump Station (4 total)	Rumaila Pump Station (1 total)	IPSA-1 Pump Station (1 total)	Mina Al Bakr (2 total)	STAB (2 total)	Total
2	10					2	14	SLOP PUMPS	5 HP		25 GPM @ 100 PSI			20								
2	10	4	1	1		2	20	DIESEL TANKS	13'-6"(Dia) x 20'	ATM. @ 140 F	500 BBL			20								
					1		1	METERING SKID		TWD 56" LINES	2.0 MM BPD CRUDE			52								
					2		2	HYDRAULIC PACKAGES		TWO SETS OF 4 LOADING ARMS				26								
					2		2	Single Point Mooring (SPM) INCLUDING PIPELINE END TERMINATION (PLET)						49-60								
					2		2	48" SUBSEA BALL VALVE WITH SUBSEA GEAR OPERATOR	EITHER DIVER OR TORQUE BUCKET					16-20								
2	10	4	1	1		2	20	MAINTENANCE SHEDS	25' x 50'					16-20								
								ELECTRICAL														
2	10	4	1	1		2	20	TRANSFORMERS						16-20								
2	10	4	1	1		2	20	PREFABRICATED ELECTRICAL BUILDING COMPLETE WITH SWITCHGEAR, MCC, UPS, DC, CONTROL ROOM, etc.						30-36								
								INSTRUMENTATION														
4	20						24	14" ON/OFF BALL VALVE						4-6								
4	20					8	32	16" ON/OFF BALL VALVE						4-6								
2	10						12	36" ON/OFF BALL VALVE						4-6								
		8	2	2			12	48" ON/OFF BALL VALVE						24								
4	20					6	30	4" GLOBE CONTROL VALVE						10-12								
8	40						48	12" GLOBE CONTROL VALVE						12-14								
8	40						48	14" GLOBE CONTROL VALVE						14								
8	40					2	50	16" GLOBE CONTROL VALVE						16								
2	10	4	1	1			18	36" BUTTERFLY CONTROL VALVE						18								
4	20	4	1	1		4	34	D/P FLOW TRANSMITTER WITH ORIFICE						6								
10	50	8	1	1		6	76	PRESSURE TRANSMITTERS						6								
4	20	4				8	36	TEMPERATURE TRANSMITTERS WITH THERMOWELLS						6								
16	80		2	2		10	110	RADAR LEVEL TRANSMITTER						6								
2	10	4	1	1		2	20	DELTA V PROCESS AUTOMATION SYSTEM						12								
2	10	4	1	1		2	20	MODICON SAFETY SYSTEM						12								
														TOTAL								

(b)(4)

NOTES:

1. Whenever possible, all major equipment shall be fabricated and delivered on skids/modules with associated piping, valves, instruments, controls, wires, cables, etc. completely pre-installed, ready for external hook-up.
2. All major equipment shall be designed, fabricated, inspected and tested in complete compliance with all applicable API, ASME, ANSI, ASTM, TEMA, NFPA, NEMA, OSHA and all other applicable industry codes and standards.
3. All Electric Motor drivers shall be in complete compliance with NEC and NEMA standards.
4. All Electrical and Instrumentation items shall be suitable for installation in Class 1, Group D, Division 2 electrical area classification.
5. Instrument Air Package includes one vertical carbon steel wet air receiver, two complete compressor packages with inter-coolers and after-coolers, two complete instrument air dryer packages and one vertical carbon steel instrument air receiver with sufficient volume for 15 minutes instrument air supply.

QUANTITIES														Lead Time (Wks ARO)	Budget Cost US$ X 1000 (+/-20%)									
S. GOSP 300 MBD (6 total)	S. GOSP 25 MBD (10 total)	N. GOSP 300 MBD (2 total)	N. GOSP 100 MBD (3 total)	N. GOSP 25 MBD (4 total)	STAB (3 total)	S. GOSP TYP. PS (8 total)	N. GOSP TYP. PS (4 total)	Total	DESCRIPTION	SIZE	DESIGN CONDITIONS	CAPACITY	Material		Unit Budget Cost US$	S. GOSP 300 MBD (6 total)	S. GOSP 25 MBD (10 total)	N. GOSP 300 MBD (2 total)	N. GOSP 100 MBD (3 total)	N. GOSP 25 MBD (4 total)	STAB (2 total)	S. GOSP Typ PS (8 total)	N. GOSP Typ PS (4 total)	Total
12								12	INLET MANIFOLDS	36" / 6" / 4"	600 PSIG @ 200 F	300 MBD, API 5000	(b)(4)	26	(b)(4)									
		4						4	INLET MANIFOLDS	36" / 6" / 4"	275 PSIG @ 200 F	300 MBD, API 5000		26										
			3					3	INLET MANIFOLDS	36" / 6" / 4"	275 PSIG @ 200 F	100 MBD, API 5000		22										
	10							10	INLET MANIFOLDS	18" / 6" / 4"	600 PSIG @ 200 F	25 MBD, API 5000		26										
				4				4	INLET MANIFOLDS	18" / 6" / 4"	275 PSIG @ 200 F	25 MBD, API 5000		22										
						8	4	12	INLET MANIFOLDS	INLETS 1-48" OUTLETS 2-36"	1100 PSIG @ 200F	1,500 MBD		26										
						8	4	12	OUTLET MANIFOLDS	INLETS 2-36" OUTLETS 1-48"	1100 PSIG @ 200F	1,500 MBD		26										
6		2	3					11	DEGASSING BOOTS	12' (Dia) X 32'	120 PSIG @ 200F	300 MBD		16-20										
	10			4				14	DEGASSING BOOTS	3.5' (Dia) X 32'	120 PSIG @ 200F	25 MBD		8-10										
								0	INLINE DEGASSERS	FUTURE	600 PSIG @ 200F	300 MBD		46										
6								6	HP SEPARATORS	14' (Dia) x 76'	600 PSIG @ 200F	300 MBD, Epoxy Coating		46										
	10							10	HP SEPARATORS	6.5' (Dia) x 32'	600 PSIG @ 200F	25 MBD, Epoxy Coating		36										
6		2						8	MP SEPARATORS	14'(Dia) x 148'	275 PSIG @ 200F	300 MBD, Epoxy Coating		46										
			3					3	MP SEPARATORS	12'(Dia) x 100'	275 PSIG @ 200F	100 MBD, Epoxy Coating		40										
	10			4				14	MP SEPARATORS	7.5'(Dia) x 65'	275 PSIG @ 200F	25 MBD, Epoxy Coating		36										
6		2						8	LP SEPARATORS	14'(Dia) x 148'	120 PSIG @ 200F	300 MBD, Epoxy Coating		42										
			3					3	LP SEPARATORS	12'(Dia) x 100'	120 PSIG @ 200F	100 MBD, Epoxy Coating		36										
	10			4				14	LP SEPARATORS	7.5' (Dia) x 65'	120 PSIG @ 200F	25 MBD, Epoxy Coating		32										
6	10	2	3	4				25	TEST SEPARATORS	4'(Dia) x 15'	1440 PSIG@ 200F	22 MBD, Epoxy Coating		36										
12		4						16	DEHYDRATOR	15' (Dia) x 90'	120 PSIG @ 200F	300 MBD		45										
			3					3	DEHYDRATOR	14' (Dia) x 84'	120 PSIG @ 200F	100 MBD		40										
	10			4				14	DEHYDRATOR	7' (Dia) x 42'	120 PSIG @ 200F	25 MBD		34										
12		4						16	DESALTER	15' (Dia) x 90'	120 PSIG @ 200F	300 MBD Package 10% WC/100,000 ppm Salinity		45										
			3					3	DESALTER	14' (Dia) x 84'	120 PSIG @ 200F	100 MBD Package 10% WC/100,000 ppm Salinity		40										
	10			4				14	DESALTER	7' (Dia) x 42'	120 PSIG @ 200F	25 MBD Package 10% WC/100,000 ppm Salinity		35										
12	10	2	3	4				31	STOCK TANKS	60' (Dia.) x 42'	ATMOSPHERIC	20,000 BBL		40										
					6			6	FEED DRUMS	14' (Dia) x 148'	200 PSIG @ 200F	300 MBD		26										
					3			3	STORAGE TANKS			50,000 BBL		40										
					3			3	STABILIZER COLUMNS	18' (Dia) x 80'	150 PSIG @ 650F, 25 TRAYS	300 MBD		52										
					3			3	FEED/BOTTOMS EXCHANGERS	Shell and Tube	200 PSIG @ 450F TUBES & SHELL	240 MMBTU/hr 60,000 ft2		32										
					3			3	STABILIZER BOTTOMS AIR COOLERS	8-40 HP PER FAN	200 PSIG @ 450F	50 MMBTU/Hr 40,000 ft2		30										
					3			3	STABILIZER FIRED HEATERS		450 PSIG @ 650F	240 MM BTU/HR		56										
					6			6	STABILIZER HEATER PUMPS	400 HP	300 F PUMPING T/0.8 sp gr/7 cp	4500 GPM @ 100 PSI		36										
6		2			3	16	8	35	BOOSTER PUMPS	700 HP	WP II, 4000/60/3	22,000 GPM @ 40 PSI		42										
			3					3	BOOSTER PUMPS	125 HP	WP II, 4000/60/3	3,650 GPM @ 40 PSI		36										
	10			4				14	BOOSTER PUMPS	35 HP	WP II, 4000/60/3	975 GPM @ 40 PSI		28										
12					6	32	16	66	PIPELINE PUMPS	3500 HP		22,000 GPM @ 173 PSI		52										
	20							20	PIPELINE PUMPS	175 HP		975 GPM @ 173 PSI		36										
12		4						16	DESALTER FEED PUMPS	675 HP		11,600 GPM @ 75 PSI		42										
			6					6	DESALTER FEED PUMPS	225 HP		3870 GPM @ 75 PSI		36										
	20			8				28	DESALTER FEED PUMPS	60 HP		975 GPM @ 75 PSI		32										
12		4						16	WASTE WATER COALESCER	12' (Dia) X 40'	120 PSIG @ 200F	300 MBD		42										
			6					6	WASTE WATER COALESCER	7' (Dia) X 40'	120 PSIG @ 200F	100 MBD		42										
	20			8				28	WASTE WATER COALESCER	5' (Dia) X 40'	120 PSIG @ 200F	10 MBD		42										
6		2						8	WASTE WATER FILTER	9' (Dia) X 60'	150 PSIG @ 200F	300 MBD		28										
			3	4				7	WASTE WATER FILTER	6' (Dia) X 60'	150 PSIG @ 200F	100 MBD		24										
	10							10	WASTE WATER FILTER	4' (Dia) X 60'	150 PSIG @ 200F	10 MBD		20										
12		4						16	WASTE WATER INJECTION PUMPS	300 HP		1650 GPM @ 225 PSI		40										
			6					6	WASTE WATER INJECTION PUMPS	100 HP		550 GPM @ 225 PSI		35										
	20			8				28	WASTE WATER INJECTION PUMPS	25		150 GPM @ 225 PSI		30										

QUANTITIES														Budget Cost US$ X 1000 (+/-20%)									
S. GOSP 300 MBD (6 total)	S. GOSP 25 MBD (10 total)	N. GOSP 300 MBD (2 total)	N. GOSP 100 MBD (3 total)	N. GOSP 25 MBD (4 total)	STAB (3 total)	S. GOSP TYP. PS (8 total)	N. GOSP TYP. PS (4 total)	Total	DESCRIPTION	SIZE	DESIGN CONDITIONS	CAPACITY	Material	Lead Time (Wks ARO)	Unit Budget Cost US$	S. GOSP 300 MBD (6 total)	S. GOSP 25 MBD (10 total)	N. GOSP 300 MBD (2 total)	N. GOSP 100 MBD (3 total)	N. GOSP 25 MBD (4 total)	STAB (2 total)	S. GOSP Typ PS (8 total)	N. GOSP Typ PS (4 total)	Total
12		4						16	WASH WATER PUMPS	75 HP		550 GPM @ 175 PSI	(b)(4)	30	(b)(4)									
			3					3	WASH WATER PUMPS	25 HP		180 GPM @ 175 PSI		25										
	20			8				28	WASH WATER PUMPS	7.5 HP		50 GPM @ 175 PSI		20										
6		2						8	WASH WATER TANKS			30,000 BARRELS		40										
			3					3	WASH WATER TANKS			10,000 BARRELS		35										
	10			4				14	WASH WATER TANKS			5,000 BARRELS		32										
						8	4	12	GAS TURBINE POWER GENERATORS		LM 2500	20 MW		50										
18	20	2	6		6			52	GAS TURBINE POWER GENERATORS			2 MW EA.		60										
6	10	2	3	4	6	8	4	43	FUEL GAS CONDITIONING AND COMPRESSION			By Gas Turbine Supplier. Pkg will be furnished with GT Pkg.												
6	10	2	3	4	3	8	4	40	EMERGENCY POWER GENERATORS		DIESEL DRIVEN	0.5 MW EA.		40										
6	10	2	3	4		8	4	37	INSTRUMENT AIR COMPRESSOR PKGS.	75 HP EA.	TWO COMPRESSORS	100 SCFH @ 150PSIG		20										
6	10	2	3	4				25	CHEMICAL INJECTION PACKAGES	10 HP	5 Chemicals, 5 Tanks, 10 Pumps	0 - 25 GPH, Standard Capacity Day Tanks		30										
6	10	2	3	4	3	8	4	40	FIREWATER STORAGE TANKS	65' (Dia) x 60'	ATM. @ 140 F	30,000 BBL		40										
6	10	2	3	4	3	8	4	40	FIREWATER PUMPS	400 HP	12' x 12' x 7' H	2500 GPM @ 175 PSI		40										
6								6	WELLWATER PUMPS	75 HP		600 GPM @ 50 PSI (500 FT WELL)		32										
			3					3	WELLWATER PUMPS	30 HP		200 GPM @ 50 PSI (500 FT WELL)		30										
		2			3			5	WELLWATER PUMPS	20 HP		100 GPM @ 50 PSI (500 FT WELL)		28										
	10			4				14	WELLWATER PUMPS	10 HP		50 GPM @ 50 PSI (500 FT WELL)		26										
					6			6	STABILIZER FEED PUMPS	900 HP	100 F, 0.85, 50 CP	10,000 GPM @ 100 PSI		40										
					6			6	BOTTOMS RUNDOWN PUMPS	800 HP	200 F, 0.8, 30CS	9000 GPM @ 100 PSI		40										
				8				8	GROUND FLARES			6 MMSCFD @ 75 PSIG		16										
	20		6					26	GROUND FLARES			20 MMSCFD @ 75 PSIG		20										
		4						4	GROUND FLARES			75 MMSCFD @ 75 PSIG		20										
12					6			18	GROUND FLARES			210 MMSCFD @ 75 PSIG		28										
6	10	2	3	4	3			28	FLARE IGNITER SKIDS			Included w/Flares												
6	10	2	3	4	3			28	SLOPS/DIESEL TANKS	20' (Dia) x 36'	ATM. @ 140 F	2000 BBL		32										
6	10	2	3	4	3			28	SLOP PUMPS	5 HP		25 GPM @ 100 PSI		20										
6	10	2	3	4	3	8	4	40	DIESEL TANKS	13'-6"(Dia) x 20'	ATM. @ 140 F	500 BBL		20										
								0	METERING SKID		TWO 56" LINES	2.0 MM BPD CRUDE		52										
								0	HYDRAULIC PACKAGES		TWO SETS OF 4 LOADING ARMS			26										
								0	Single Point Mooring (SPM) INCLUDING PIPELINE END TERMINATION (PLET)					48-60										
								0	48" SUBSEA BALL VALVE WITH SUBSEA GEAR OPERATOR	EITHER DIVER OR TORQUE BUCKET				16-20										
6	10	2	3		3	8	4	36	MAINTENANCE SHEDS	25' x 50'				16-20										
										ELECTRICAL														
										Estimated to be 15% of the Equipment Cost														
									TRANSFORMERS					16-20										
6	10	2	3					21	PREFABRICATED ELECTRICAL BUILDING COMPLETE WITH SWITCHGEAR, MCC, UPS, DC, CONTROL ROOM, etc.					30-36										
										INSTRUMENTATION/CONTROL/SAFETY SYSTEM														
										Estimated to be 5% of the Equipment Cost														
									14" ON/OFF BALL VALVE					4-6										
									16" ON/OFF BALL VALVE					4-6										
									36" ON/OFF BALL VALVE					4-6										

QUANTITIES															Budget Cost US$ X 1000 (+/-20%)									
S. GOSP 300 MBD (6 total)	S. GOSP 25 MBD (10 total)	N. GOSP 300 MBD (2 total)	N. GOSP 100 MBD (3 total)	N. GOSP 25 MBD (4 total)	STAB (3 total)	S. GOSP TYP. PS (8 total)	N. GOSP TYP. PS (4 total)	Total	DESCRIPTION	SIZE	DESIGN CONDITIONS	CAPACITY	Material	Lead Time (Wks ARO)	Unit Budget Cost US$	S. GOSP 300 MBD (6 total)	S. GOSP 25 MBD (10 total)	N. GOSP 300 MBD (2 total)	N. GOSP 100 MBD (3 total)	N. GOSP 25 MBD (4 total)	STAB (2 total)	S. GOSP Typ PS (8 total)	N. GOSP Typ PS (4 total)	Total
									48" ON/OFF BALL VALVE					24	(b)(4)	(b)(4)								
									4" GLOBE CONTROL VALVE					10-12										
									12" GLOBE CONTROL VALVE					12-14										
									14" GLOBE CONTROL VALVE					14										
									16" GLOBE CONTROL VALVE					16										
									36" BUTTERFLY CONTROL VALVE					18										
									D/P FLOW TRANSMITTER WITH ORIFICE					6										
									PRESSURE TRANSMITTERS					6										
									TEMPERATURE TRANSMITTERS WITH THERMOWELLS					6										
									RADAR LEVEL TRANSMITTER					6										
									DELTA V PROCESS AUTOMATION SYSTEM					12										
									MODICON SAFETY SYSTEM					12										
															TOTAL									

NOTES:

1. Whenever possible, all major equipment shall be fabricated and delivered on skids/modules with associated piping, valves, instruments, controls, wires, cables, etc. completely pre-installed, ready for external hook-up.
2. All major equipment shall be designed, fabricated, inspected and tested in complete compliance with all applicable API, ASME, ANSI, ASTM, TEMA, NFPA, NEMA, OSHA and all other applicable industry codes and standards.
3. All Electric Motor drivers shall be in complete compliance with NEC and NEMA standards.
4. All Electrical and Instrumentation items shall be suitable for installation in Class 1, Group D, Division 2 electrical area classification.
5. Instrument Air Package includes one vertical carbon steel wet air receiver, two complete compressor packages with inter-coolers and after-coolers, two complete instrument air dryer packages and one vertical carbon steel instrument air receiver with sufficient volume for 15 minutes instrument air supply.

APPENDIX 3 (CONSTRUCTION) to ANNEX F (ENGINEERING & CONSTRUCTION) to LOGCAP CONTINGENCY SUPPORT PLAN

REFERENCES. See ANNEX N, Appendix 4.

TIME ZONE USED THROUGHOUT THE PLAN. Iraq.

TASK ORGANIZATION. See ANNEX A.

1. **SITUATION.** See Base PLAN.

2. **MISSION.** See Base PLAN.

3. **EXECUTION.** See Base PLAN.

   a. **Concept of Operations:**

      1) **Construction Strategy.** BRS receives early notification to allow the pre-positioning of equipment and the recruitment and training of key personnel and teams equipped for the assessment, engineering, construction, and HSE activities during this EVENT.

BRS will deploy a forward operating team to prepare for the arrival of the advanced party of the assessment, engineers, HSE and construction teams at NTP + 72 hours. At the direction of the PCO, BRS will deploy engineer and construction teams to the event area. The following areas of priority will be assessed; they are not listed in the order of importance:

- South Rumailah GOSP 1Q
- South Rumailah GOSP 2S
- South Rumailah GOSP 3R
- South Rumailah GOSP 4J
- North Rumailah Central GOSP
- North Rumailah GOSP 2
- North Rumailah GOSP 4
- North Rumailah GOSP 5
- North Rumailah Janubia GOSP
- North Rumailah Shamiya GOSP
- Az Zubayr Central GOSP
- Az Zubayr GOSP 1
- Az Zubayr GOSP 2
- Az Zubayr GOSP 3
- Az Zubayr GOSP 4
- Az Zubayr Hammar GOSP

- West Qurnah GOSP 6
- West Qurnah GOSP 7
- West Qurnah GOSP 8
- Buzurgan North GOSP
- Buzurgan Southern GOSP 1
- Buzurgan Southern GOSP 2
- Buzurgan Southern GOSP 3
- Al Luhays GOSP
- Nasiriyah GOSP
- Majnoon GOSP
- Jabal Fauqi North GOSP
- Jabal Fauqi South GOSP
- East Baghdad GOSP
- Abu Ghurab North GOSP
- Abu Ghurah South GOSP
- Subba GOSP
- Nahr Umar GOSP
- Production Wells, extinguish fires & make repairs, for Wellheads in Southern Fields
- Production Flowlines and gathering lines in Southern Fields
- Power Grid for all Southern Facilities
- Az Zubayr Crude Oil Pumping Station (Z-1)
- Rumailah Crude Oil PST Strategic PPL (PS-2)
- North Rumailah Central GOSP Pump Station
- North Rumailah Central Gathering Station Pump Station (PS-1)
- Buzurgan Complex Export Pump Station
- Avanah Pump Station
- IPSA Pump Station 1
- IPSA Pump Station 2
- Oil Pipeline from North Strategic pipeline to Rumailah Gathering Station (Bi-directional)
- Oil Pipeline from North Rumailah Central GOSP to Al Faw
- Oil Pipeline from Az Zubayr Pump Station (Z-1) to Al Faw North of Tankfarm
- Oil Pipelines from Al Faw South to Mina Bakr Platforms A & B
- Oil Pipeline from IPSA-PS1 to Az Zubayr Pump Station (Z-1)

- Oil Pipeline from IPSA-PS1 to IPSA-PS2
- Oil Pipeline from IPSA-PS2 to IPSA-PS3
- Oil Pipeline from Kirkuk Crude Processing Plant 1 & 2 to Turkey
- Gas Pipeline from North Rumailah to Mahmudiyah
- Gas Pipeline from North Rumailah to South Rumailah
- Gas Pipeline from South Rumailah to Az Zubayr
- Gas Pipeline from Az Zubayr to Al Faw
- Mina Al Bakr Crude Oil Export Terminal
- Khor Al Amaya Crude Oil Export Terminal
- Al Faw Storage, Metering & Export North Terminal
- Al Faw Storage, Metering & Export South Terminal
- Abu Flus Terminal, Basrah
- Khor Az Zubayr Terminal & Storage, Az Zubayr
- Umm Qasr Terminal, Umm Qasr
- Iraq-Turkey Pump Station IT-1
- Iraq-Turkey Pump Station IT-1A
- Iraq-Turkey Pump Station IT-2
- Iraq-Turkey Pump Station IT-2A
- Kirkuk Area Pump Station K-1
- Kirkuk Area Pump Station K-2
- Kirkuk Area Pump Station K-3
- Kirkuk Crude Processing Plant No. 1
- Kirkuk Crude Processing Plant No. 2
- Area for "New" Kirkuk Crude Stabilization Plant 1 near Crude Processing Plant No. 1
- Area for "New" Kirkuk Crude Stabilization Plant 2 near Crude Processing Plant No. 2
- Kirkuk Baba GOSP
- Kirkuk Shurau GOSP
- Kirkuk Hanjira GOSP
- Kirkuk Quton GOSP
- Kirkuk Saralu GOSP
- Kirkuk Sarbashkah GOSP
- Kirkuk Jabalur
- Bay Hassan North GOSP

- Bay Hassan South GOSP
- Saddam GOSP
- Khabaz GOSP
- Jambur North GOSP
- Jambur South GOSP
- Qayyarah GOSP
- Qayyarah Najmah GOSP
- Qayyarah Jawan GOSP
- Qayyarah Qasab GOSP
- Ayn Zalah GOSP
- Ayn Zalah Butmah GOSP
- Sufayah GOSP
- Production Wells, extinguish fires & make repairs, for Wellheads in Northern Fields
- Production Flowlines and gathering lines in Northern Fields
- Power Grid for all Northern Facilities
- Iraq-Turkey Pump Station 1
- Az Zubayr Petrochemical Complex, Az Zubayr
- Basrah Refinery, Basrah
- Tubah Tank Farm and Pump Station, Az Zubayr
- Gas Plant Az Zubayr LPG Plant # 1, Az Zubayr
- Gas Plant Az Zubayr LPG Plant # 2, Az Zubayr
- Gas Plant Az Zubayr LPG Fractionation Plant, Az Zubayr
- Gas Plant Rumailah LPG Plant
- Gas Plant Kirkuk H_2S Removal Plant
- Gas Plant Kirkuk Sulfur Plant
- Gas Plant Kirkuk North Gas Plant
- Kirkuk "New" Gas Plant @ Crude Processing Plant-2
- Gas Handling Facility @ Saddam Fields, Baji
- Az Zubayr and Rumailah Water Injection Plants
- Kirkuk Water Injection Plants
- Baji Refinery, Kirkuk

2) **Assessment Teams.** At the direction of the PCO, the Assessment Teams will begin work in the EVENT area. Upon Notice to Proceed (NTP), Assessment Teams will visit pre-determined sites

to assess the extent of repair, refurbishment or replacement necessary to reinstate the different facilities. Site assessments include gas oil separations plants (GOSPs), wellheads, pump stations, gathering lines, crude stabilization plants, crude export facilities, pipelines, refineries, power grid, and gas plants.

Teams will assess field conditions at all sites. Data will be communicated almost real time to support teams that will provide recommendations for refurbishment/revamp or total replacement of each facility.

The assessment teams will be comprised primarily of BRS Western Expat personnel, with contractor personnel, TCNs, and local Iraqi operations/maintenance plant personnel (as available to provide hands on knowledge of existing facilities).

3) **Assessment Teams Staffing.** BRS's staff included on the assessment teams will generally be from all disciplines to ensure a comprehensive report of field information about the different facilities in these studies. Below is a list of positions for the initial fact-finding assignment:

Engineering

- Project Engineer
- Civil-Structural Engineer
- Piping Engineer
- Vessel/Mechanical Engineer
- Electrical Engineer
- Instrumentation Engineer

Construction

- Construction Manager
- General Superintendent
- Plant Services Manager
- Rigging Superintendent
- Civil Craft Supervisor
- Piping Craft Supervisor
- QA/QC Inspector

HSE

- HSE Manager
- Medic Specialist

4) **Support Personnel.** Support personnel will accompany the damage assessment teams to review local infrastructure facilities, the labor market, availability of equipment, and procurement opportunities from local vendors in the area. A staff of subcontractors accompanying the assessment team will include laborers to dig around leaking buried pipelines if an oil leak is spotted, scaffolders to erect scaffolding for access to plants for investigation above ladder height if needed, and other similar tradesmen.

5) **Long Lead Materials.** After notice to proceed from the PCO, BRS will procure the long lead material and equipment necessary for repair and reinstatement of existing facilities. BRS will develop a recommended detailed list of long lead time items for approval by the client.

6) **Construction Planning.** Following assessment review, BRS will begin detailed construction planning at our Houston office. Some of the assessment team will remain in Iraq to continue gathering facts and data for engineering use in completing detailed designs (e.g. equipment ratings and nameplate information, tie-in location coordinates, as-built locations of existing facilities, etc).

7) **Construction Strategy.** After finalizing the design and scope of work, we will complete the contracting strategy to execute the project at the different sites. Contractors, their subcontractors and sub-tier subcontractors will be required to follow the same back to front planning methods and techniques utilized by BRS.

8) **Construction Management.** Construction management will aim at achieving maximum progress and productivity at each project area. At approximately 65% completion of the individual projects, the construction focus will be converted from an area progress-tracking mode to a system progress-tracking mode. Using the proprietary First Planner and TOSTR programs will ensure a smooth transition from an area progress-tracking mode to a system progress-tracking mode. Site construction management will then coordinate and sequence the work to complete systems and prepare equipment to support the planned commissioning schedule.

   Using the above noted programs and systems, construction management will be safe and timely. Mechanical acceptance of the project sites will conform to all project requirements and be transferred to the project commissioning team in accordance with the system completion schedule.

9) **Subcontractor Management.** BRS will develop multiple contracting and subcontracting plans. BRS will take advantage of long standing relationships with technology-based contractors to assure clear lines of communication and responsibility between CMT and prime contractors and subcontractors. Key construction and contract administration personnel will be placed in the home office of the prime contractors. By establishing this type of integrated team approach with the prime contractors and subcontractors, issues regarding constructability and contract interfaces will be developed and managed efficiently.

   BRS will use our Middle East knowledge and experience in executing large complex projects in the region - to select qualified and experienced prime contractors and subcontractors. Selected contractors will perform construction work under the management of our site CMT staff. BRS will assign experienced and motivated construction management personnel to each site, under the direction of the Deputy Project Manager, Construction, to implement the construction execution strategy.

b. Tasks:

1) **Organization & Responsibilities.** BRS' construction management organization will consist of both home office and site personnel from our experienced BRS resources. The construction management staff will transition from the engineering office in Houston to the site for construction management execution. This will help to ensure the smooth coordination of the interfaces between the home office and the field. BRS will incorporate our construction management experience with Third Country Nationals (TCNs) to augment expatriate staff at Site. BRS experience in recruitment in the region indicates that there is adequate availability of TCN personnel who are available and experienced in working in the Middle East.

2) **Home Office Construction Organization.** The Home Office construction management organization charts for the engineering and construction execution phases of the project for the project management and related activities are included.

The main activities associated with this construction management organization will be:

- Develop temporary facilities requirements
- Implement the contractors and subcontract plans and award of same
- Implementation of BRS proprietary back to front planning and execution systems.
- Participate in the development of the detailed schedules for the different reinstatement Projects and new projects to include construction required on site dates for deliverables
- Provide constructability input
- Perform modularization study
- Perform construction risk assessments
- Develop HSE field plans and procedures
- Provide construction input into the project execution plan
- Develop and implement rigging and heavy lift plans and procedures
- Prepare project specific construction procedures
- Prepare project specific start-up and commissioning procedures

3) **Site Construction Organization.** The proposed overall construction management organization charts for the CMT required for the different work areas are included.

The main activities associated with the site CMT organization will be:

- Adherence to safety goals
- Avoidance of adverse health and environmental issues
- Co-ordinate erection activities
- Efficient construction management of direct hire repair teams, contractors and subcontractors
- Co-ordinate the pre-mechanical completion activities

- Early phased systems completion to support commissioning
- Achieve schedule requirements
- Adherence to quality requirements
- Identify and control interfaces
- Maintain communications with all parties

For more detail, see CMT organizational charts Tabs A-F

4) **Position Descriptions.** The site construction management organization indicates a number of key positions, briefly described as follows:

a) **Deputy Project Manager, Construction (DPM-C):** Has overall responsibility for all construction activities in Iraq and reports directly to the project manager, who delegates him the necessary authority and autonomy to fulfill his responsibilities. The DPM-C is responsible for relationships with client's representative and local authorities. Working with the DPM-C are the functions of HSE, contract management, project controls, quality assurance and finance and accounting.

b) **Senior Construction Manager:** Responsible for all construction activities at the different sites and ensures that all project requirements are achieved. This position will deputize for the DPM-C and provides the overall construction management in relation to field erection.

c) **Construction Manager:** Reports to the Senior Construction Manager and is responsible for all construction activities at the different project sites assigned for construction management. He will have Area Superintendents working for him to ensure that all project goals are maintained.

d) **Area Superintendent:** Responsible for execution of construction work at the different designated project sites, with construction subdivided into areas of execution and responsibility; including the following:

- Manage and coordinate interface issues
- Coordinate activities of contractors and subcontractors
- Participate in development of detailed schedules
- Verify availability of contractors and subcontractor's resources
- Ensure availability of materials and engineering data to support schedule requirements
- Verify contractors and subcontractors progress
- Ensure contractors and subcontractors work in an efficient manner
- Ensure contractors and subcontractors adhere to HSE, quality and schedule

e) **Technical Services Manager:** Responsible for site activities relating to field engineering, including the following:

- Technical document control and distribution

- Establish and maintain IT facilities
- Site engineering and resolution of drawing queries
- Maintain technical queries logs and ensure resolution
- Drafting and field sketch
- Administer vendor servicemen on site(subcontract manager)
- As built drawings

f) **Administration Manager**: Responsible for site activities relating to field engineering, including the following:

- Project accounting
- Personnel administration
- Camp administration
- Personnel transportation
- Immigration formalities
- General affairs
- Public relations
- Control of office facilities

g) **Field Material Manager**: Responsible for the establishment and implementation of the material control function on site, including the following:

- Establish material management system at site
- Monitor and verify material deliveries
- Supervise custom clearance
- Receipt, warehousing and control of all direct and indirect materials and equipment
- Protective maintenance of materials in storage
- Issue materials (if applicable) to contractors and subcontractors
- Maintain status reports for materials and expedite as required
- Construction waste management

h) **Site Controls Manager**: Responsible for schedule and cost control activities on site, including the following:

- Maintain project schedule
- Develop schedules as required
- Evaluate contractors and subcontractor progress and resource reporting
- Monitor contractors and subcontractor progress trends

- Progress measurement and reporting
- Man-hour reporting
- Cost tracking and reporting
- Prepare project status reports

i) **Subcontracts Manager**: Responsible for subcontract administration on site, including the following:

- Contract administration of contractors and subcontractors
- Develop quantity data (controls manager)
- Contractors and subcontractors invoice review and verification
- Provide input to project controls reporting
- Verify contractors and subcontractors variations(controls and subcontract administrator)
- Resolve contractual issues
- Prepare change/variation documentation

j) **Site QA/QC Manager**: The responsibilities associated with this position and function are specified in ANNEX N, Appendix 7.

k) **Site HSE Manager**: The responsibilities associated with this position and function are specified in ANNEX N, Appendix 6.

5) **Mobilization & Demobilization.** BRS will ensure that the correct level of personnel and resources are mobilized in a planned and coordinated manner.

Immediately after contract award, the Construction Management Team (CMT) will be established as an integral part of the project's organization. The BRS construction management organization will consist of personnel in the home office and in the EVENT area, under the direction of the DPM-C.

The Home Office construction management organization will, where possible, utilize personnel that have been involved in the proposal phase of the project. A home office construction manager will be part of the organization. This position will be the focal point for construction activities in the home office when the DMP-C relocates to site.

BRS will promote continuity of construction personnel from the home office phase and Contractors offices, onto job site. This will promote involvement from conception to completion thus providing a uniform approach to construction management execution. Prior to mobilization to site designated personnel will participate in the project to ensure familiarity with the construction management execution requirements. The intent is that all key personnel will be assigned to BRS's office in Houston prior to site mobilization to achieve the following:

- Briefed on the objectives, goals and scope of the Project
- Prepare, or review and understand, Project specific procedures

- Participate in constructability reviews
- Ensure familiarity with the home office set up and liaison with appropriate home office personnel
- Review status of individuals particular area of responsibility

A detailed project-staffing plan will be produced during the engineering phase of the project. The staffing plan will detail the mobilization and demobilization of all staff members for the duration of the project. The staffing plan will be coordinated with the schedule to ensure resources are available to support construction execution.

6) **EPC Interface Coordination.** The interfaces within BRS organization will be managed within a fully integrated CMT for construction management execution of the field work, with key elements as follows:

- Construction management personnel working within the home office team will liaison with engineering and procurement from the outset of the Project.
- Construction personnel actively participating in preparing the Project Master Schedule and preparation of construction schedules with dates for deliverables.
- Integrated EPC management systems for scheduling and progress control.

The CMT will ensure a seamless interface between client's requirements and engineering, procurement, and construction, thereby reinforcing the coordination synergy and contributing to the production of an efficient design that is easier and safer to construct while meeting the schedule requirements.

7) **Home Office Construction Personnel.** Home Office construction personnel will coordinate their activities with all project groups, in particular, with engineering and procurement, during all phases of the project.

The Home Office construction organization will include the construction planning function that will be responsible for coordination with the engineering, procurement and project controls groups. This function will ensure that construction required dates for engineering and material deliverables are accommodated. At all stages of engineering procurement, the planning for construction requirements will be incorporated into schedule dates for engineering and material deliverables.

The Home Office construction organization will include the subcontracting function that will be responsible for coordination with the engineering group. This function will ensure that engineering data is available to support subcontract bid packages.

8) **Constructability.** BRS will implement constructability as a part of the back to front planning program by:

a) Implementing BRS proprietary back to front planning and execution systems.

b) Initiating the program during the earliest engineering phases of the project.

c) Assigning well-qualified personnel with demonstrated constructability expertise to participate in the program, including a full time constructability program coordinator.

d) Promoting and encouraging creativity, innovation, and teamwork among the participants.

e) Developing specific constructability recommendations.

f) Holding regular constructability review meetings.

g) Appointing a senior member of the project team as management sponsor.

9) **Path of Construction.** The Home Office construction organization will develop the path of construction, based on the back to front planning strategy noted earlier, to ensure all other disciplines are aware of the construction erection sequence and the priorities for deliverables, including engineering and procurement, to support the sequence.

The path of construction will dictate the required approved construction need dates of key engineering data. The issuance of approved for construction data will indicate initial and final issues.

The path of construction will also dictate required on site dates for all classified items of equipment and designated bulk materials. The delivery of designated bulk materials will be indicated by first and last shipments. The use of the proprietary First Planner will facilitate these activities.

- Priorities by area for erection and subsequently for system completion
- Early completion of utilities to support pre mechanical completion and subsequent commissioning
- Impact of long delivery items
- Location of heavy lift cranes and impact on erection of equipment
- Access for erection activities
- Site movement of heavy/large loads
- Transition from area progress tracking to system progress tracking

The construction erection work is envisioned to be at all the project distinct areas listed in BRS Construction Strategy of the facilities for restoration. They include:

- Southern Oilfield's GOSPs (at Rumailah, Al Zubaya, West Qurnah, etc.)
- Northern Oilfield's GOSPs (at Kirkuk, Bay Hassan, Saddam, Jambur, etc.)
- Flowlines and gathering lines
- Pump Stations
- Oil Pipelines
- Gas Pipelines
- Crude Oil Export Terminals
- Water Injection Plants
- Crude Processing Plants
- Power Grid
- Oil Refineries
- Gas Plants

- H_2S Removal Plants
- Sulfur Plants
- Gas Compressor Stations

10) **Subdivision of Area.** Sites will be divided into main areas of synergy, with area superintendents allocated to each area to closely control the execution of the work.

11) **Subdivision of Work.** Recognizing that there may be a contracting strategy for division of the work at the different project sites, the execution of the work could be subdivided across the sites into contractors and subcontractors work once the construction execution planning is complete.

The following options will be evaluated during the engineering phase, and decisions on how the work across the sites will be divided, will take place during the early planning stages in the engineering phase for the contracting strategy. The lists below are only some of the options that may be part of contracting strategy, once the engineering studies are completed.

Some of what may be envisioned for the subdivision of the work at the different project sites:

a) Site preparation onsite

- Clearing
- Excavation of rock
- Earthworks

b) Civil works onsite

- Grounding
- Underground piping(non pressure)
- Concrete works and foundations
- Concrete pipe racks
- Concrete fireproofing
- Backfill operations
- Paving
- Roads
- Railways

c) Civil works utilities/offsite/off-plot

- Site preparation
- Cable trench excavation
- Grounding
- Underground piping(non pressure)
- Concrete works and foundations
- Backfill operations

- Paving
- Roads
- General finishing work

d) Buildings

-Detailed engineering, procurement and construction of all masonry and/or concrete buildings including supply and installation of air conditioning, all utilities and lighting and small power equipment and materials.

e) Mechanical works onsite

- Erection of structural steel
- Equipment erection including any heavy lifting to maximize the use of major cranes on Site
- Assembly and mechanical alignment of rotating equipment
- Installation of equipment internals
- Pipe fabrication and pipe erection
- Material supply, fabrication and installation of pipe supports
- Supply all consumables, including welding
- Non destructive examination and pressure testing of piping.
- Supply of supervision, labor and equipment for mechanical acceptance activities at the different projects sites.

f) Mechanical works utilities/offsite/off-plot

-Erection of structural steel

-Equipment erection

-Assembly and mechanical alignment of rotating equipment

-Installation of equipment internals

-Pipe fabrication and pipe erection

-Material supply, fabrication and installation of pipe supports

-Non destructive examination and pressure testing of piping

g) Miscellaneous tanks onsite and utilities/offsite/off-plot

-Engineering, procurement and construction of an additional condensate tank and miscellaneous tanks in the utilities and offsite/off-plot areas, excluding tank foundation.

h) Instrument/Electrical works onsite and utilities/offsite/off-plot

-Installations of underground cables, including sand filling and cable tiles.

-Installation of above ground instrument and electrical cable

-Installation of instrument and electrical equipment

-Installation and hook up of instruments

-Supply of supervision, labor and equipment for mechanical acceptance work

i) Painting onsite and utilities/offsite/off-plot

-Procurement and supply of all paints and consumables

-Shop shot blasting and painting of all piping

-Top coat painting of erected piping

-Touch up painting of equipment and steelwork

j) Insulation onsite and utilities/offsite/off-plot

-Procurement and supply of all insulation materials and consumables

-Installation of hot, cold, acoustic and personnel protection insulation

-Installation of cold insulation valve and flange boxes during the commissioning period

12) Contractors and Subcontractors schedule dates. The scheduled start and finish dates for each of the contractors and that of subcontractors working for the contractors will be developed during the engineering phase. BRS scheduling department preliminary schedules will be developed during the engineering phase.

13) Management of Contractors and Subcontractors. BRS will be responsible for the management and control of the contractors and subcontractors performing work on the projects. It is important to ensure that the client, BRS, contractors, and subcontractors objectives are aligned with cooperation between the parties. This will be an essential part of jointly achieving the project objectives.

An integral part of contractors and subcontractors prequalification is verification of both parties' commitment to execute the project in accordance with all the project requirements, including the project's safety management systems and objectives. The process of obtaining contractors and the subcontractors commitment and buy in, commences with the issue of the inquiry documents with safety requirements and objectives clearly stated. During the inquiry clarification and bidding process these requirements will be discussed in detail with the contractors and the subcontractors to ensure not only understanding but also their suggestions as to processes and methods to improve performance and the involvement of all levels of the construction force.

During the execution phase of the project, BRS will manage the contractor and the subcontractor relationship's based on the following:

- Defined lines of responsibility
- Kick off meeting
- Daily contact
- Formal communications

- Weekly meetings

14) **Defined Lines of Responsibility.** Direct lines of responsibility and communication will be established between the CMT and the contractors and subcontractors. BRS will assign the appropriate level of construction management personnel to facilitate these lines of communication and direction to contractors and subcontractors. The BRS will include in documents prepared during the engineering phase of the project, all reporting requirements for the contractors and the subcontractors, and their sub-tier contractors.

    BRS will conduct a pre-mobilization meeting with each contractors and subcontractors typically one to two weeks prior to mobilization. BRS, contractors and subcontractors' key personnel will attend meetings covering issues including:

    - HSE requirements
    - Project goals
    - Scope of work
    - Review of organization
    - Work schedule and material delivery schedule
    - Review of construction plans, including temporary facilities, resource mobilization, special work methods and similar.
    - Administration and co ordination requirements
    - Lines of communication and responsibilities
    - Nominate individuals as point of contact for designated responsibilities

15) **Daily Contact.** Points of contact will be established at the working level to enable contractors and subcontractors to establish a working relationship with the responsible personnel in the CMT organization. Contractors and the subcontractors will be encouraged to actively seek advice and input from the CMT on a day to day basis. This interface and the relationships developed at the working level will be an important factor in ensuring that the work is executed in a cooperative and efficient manner. While it is the intent to resolve as many issues as possible at the working level, the need for formal communications will also be required.

16) **Formal Communications.** All formal correspondence will be numbered and maintained in logs, and all correspondence will be responded to in a timely manner. BRS tracks and responds to contractors' and subcontractors' requests for information (RFI). Technical clarifications will be researched and answered by qualified personnel.

17) **Weekly Meetings.** For the duration of the construction phase of the work, each contractor and each subcontractor will hold a weekly site meeting to address all elements of the work. The meetings will have a standard agenda that includes the following:

    a) HSE issues and performance

    b) Quality

    c) Engineering deliverables and status

d) Material deliverables and status

e) Resources including staff labor and construction equipment

f) Work completion status and progress review

g) Work to be performed/ schedule confirmation

h) Interface issues

i) Technical queries

j) Outstanding issues or responses

k) Problems and concerns

All information will be reviewed. All problems will be discussed, and corrective measures will be implemented in a timely manner. Potential concerns will also be discussed to ensure a pro-active approach to minimize corrective measures.

18) **Other Plans & Procedures.** The following Final Plans will be developed during the engineering phase.

a) HSE

b) Field Quality Control

c) Field Schedule Control

d) Field Material Control

e) Pre-mechanical Completion (developed with contractors during detail design)

f) Temporary Facilities Plant

19) **Manpower Resourcing Plan.** BRS will prepare a manpower plan during engineering phase that consists of manpower histograms and cumulative "S" curve indicating contractors and subcontractors direct/indirect labor for the project, once "scope of work" is detailed.

The labor manpower loading will be based on the estimated work volume and anticipated productivity. The labor productivity will be estimated taking work circumstances and expected performance of the labor sources into consideration, and will be based on previous project experience in the Middle East.

20) **Construction Equipment.** BRS during the engineering phase, will develop plans to ensure that construction equipment is available, and of an acceptable standard, to support the site requirements. The availability of construction equipment is an element of the contractors and subcontractors' selection process, with contractors and subcontractors submitting comprehensive details of proposed equipment. BRS will evaluate contractors and subcontractors' capabilities to mobilize required equipment to support schedule requirements.

Construction equipment will be provided with required certification that is valid to meet requirements of applicable laws.

4. SERVICE SUPPORT. See ANNEX I.

5. COMMAND AND SIGNAL. See Base PLAN and ANNEX H.

ACKNOWLEDGE:

(b)(6)
BRS PGM, LOGCAP

OFFICIAL:
(b)(6) BRS D/PGM

Tab A - CMT in Country Const-Mgmt Overall Org Chart
Tab B - Upper Management CMT Organizational Chart
Tab C - North Facilities Stabilization Plants & GOSPs CMT (Full) Org Chart
Tab D - South GOSPs CMT (Full) Organizational Chart
Tab E - North/South CMT (Partial) Organizational Chart
Tab F - Crude Oil Export Facilities CMT (Full) Org Chart

TABS A-F (CONSTRUCTION ORGANIZATION CHARTS) to APPENDIX 3 (CONSTRUCTION) to ANNEX F (ENGINEERING & CONSTRUCTION) to LOGCAP CONTINGENCY SUPPORT PLAN

REFERENCES. See ANNEX N, Appendix 4 .

TIME ZONE USED THROUGHOUT THE PLAN. Iraq.

TASK ORGANIZATION. See ANNEX A.

1. **SITUATION.** See Base PLAN.

2. **MISSION.** See Base PLAN.

3. **EXECUTION.** Tabs A through F contain BRS Proprietary Data in accordance with the modified Statement of Work from the U.S. Army Operations Support Command. As such, all information should be handled as follows:

   a. BRS Proprietary Data. In addition to protection under Federal Acquisition Regulation 3.104, this page contains BRS proprietary information. As such, this information may be withheld from the public because disclosure would cause a foreseeable harm to an interest protected by one or more Exemptions of the Freedom of Information Act, 5 USC Section 552. Furthermore, if the SECRET level classification is downgraded, it is requested that any Government entity receiving this information act in accordance with DoD 5400.7-R, and consider this information as being for official use only (FOUO), and mark, handle and store this information so as to prevent unauthorized access.

4. **SERVICE SUPPORT.** See ANNEX I.

5. **COMMAND AND SIGNAL.**

   a. **Command.** See Base PLAN, ANNEX A

   b. **Signal.** See Base PLAN, ANNEX H.

ACKNOWLEDGE:

(b)(6)
BRS PGM, LOGCAP

OFFICIAL:
(b)(6) BRS D/PGM

TAB A (CMT IN COUNTRY COUSNTRUCTION MANAGEMENT OVERALL ORG CHART) to APPENDIX 3 (CONSTRUCTION) to ANNEX F (CONSTRUCTION & ENGINEERING) to LOGCAP CONTINGENCY

(b)(4)

TAB B (UPPER MANAGEMENT CMT ORGANIZATIONAL CHART) to APPENDIX 3 (CONSTRUCTION) to ANNEX F (CONSTRUCTION AND ENGINEERING) to LOGCAP CONTINGENCY SUPPORT PLAN

(b)(4)

TAB C (NORTH FACILITIES STABILIZATION PLANTS & GOSPS CMT-FULL ORGANIZATIONAL CHART) to APPENDIX 3 (CONSTRUCTION) to ANNEX F (CONSTRUCTION AND ENGINEERING) to LOGCAP CONTINGENCY SUPPORT PLAN

(b)(4)

(b)(4)

(b)(4)

TAB E (NORTH/SOUTH CMT – PARTIAL ORGANIZATIONAL CHART) to APPENDIX 3 (CONSTRUCTION) to ANNEX F (CONSTRUCTION AND ENGINEERING) to LOGCAP CONTINGENCY SUPPORT

(b)(4)

TAB F (CRUDE OIL EXPORT FACILITIES CMT – FULL ORGANIZATIONAL CHART) to APPENDIX 3 (CONSTRUCTION) to ANNEX F (CONSTRUCTION AND ENGINEERING) to LOGCAP CONTINGENCY SUPPORT PLAN

(b)(4)

APPENDIX 4 (OPERATIONS & MAINTENANCE) to ANNEX F (CONSTRUCTION & ENGINEERING) to LOGCAP CONTINGENCY SUPPORT PLAN

REFERENCES. See ANNEX N, Appendix 4.

TIME ZONE USED THROUGHOUT THE PLAN. Iraq.

TASK ORGANIZATION. See ANNEX A.

1. SITUATION. See Base PLAN.

a. Assumptions.

1) Production activities will involve existing Iraqi personnel and organizations whenever possible, subject to and consistent with guidance from appropriate authorities.
2) HCN and Third Country National (TCN) operations personnel will have to be trained on any new equipment or controls systems.
3) Higher staffing requirements will be required during the first year of operation.
4) Documentation to support writing operating procedures covering existing and new facilities will be provided in a timely manner and in the English language. (If not, interpretation will be required.)
5) Translators with technical writing experience will be necessary to convert operating manuals and procedures from English to language(s) of local/regional employees.
6) Interpreters will support both Home Office and field activities.
7) Vendor support for operating the gas turbine generators can be demobilized once operators are confident they can operate the equipment.
8) Existing units are dilapidated and do not meet minimum safety standards.
9) Spare parts for existing equipment may be difficult if not impossible to acquire.
10) Existing pneumatic instrumentation is probably damaged and unreliable due to extended operation without instrument air driers.
11) Staffing requirements will reflect the belief that most valves will be manually operated.
12) Vendor Installation Maintenance & Operating Instructions (IMOIs) will be available in a timely manner.
13) Existing control room alarm panels and instrument readouts will not be in English.
14) A laboratory will be provided to support the Southern and Northern Regions.
15) Oil reservoir management will initially be controlled by expatriates.
16) Senior management personnel can be identified, interviewed, hired, and mobilized in three months.
17) At least 60 percent of operators and maintenance personnel will have at least five years experience in refinery and/or petrochemical plants.
18) Operations and maintenance personnel with a minimum of five years experience can be can be identified, interviewed, hired, and mobilized in three months.

2. MISSION. See Base PLAN.

3. EXECUTION. See Base PLAN.

a. Concept of Operations. Return to the pre-hostility production level (estimated at 2.4 million barrels per day (MM BPD)) of crude oil daily plus the derivative natural gas and refined petroleum products. Restore to the pre-hostility production capacity of 3.1 MM BPD of crude oil

daily plus the derivative natural gas and refined petroleum products. Three operating scenarios are considered.

1) Utilize existing facilities – Best Case

2) Mixture of existing and new facilities – Most Probable Case

3) Engineer and construct new production facilities – Worst Case

The assumption is made that existing pipelines are usable or can be repaired. Assessment Teams will evaluate the feasibility of using existing production facilities and export terminals.

a) Best Case – No Damage to Existing Facilities

Using existing facilities is the best case scenario for quickly returning to pre-hostility production levels but that is not the safest or most reliable solution. The United Nations "Expert Report" issued in March 2000 emphasized the total state of disrepair that is endemic in the oil production and hydrocarbon processing facilities. Expatriate operations and maintenance specialists can work with Iraqi personnel to identify and correct deficiencies. Safety issues would be addressed first followed closely by optimizing the reliability and operation of the facility.

Any program to start up an existing facility using expatriate personnel must be preceded by a thorough evaluation by specialists in plant operation, plant maintenance and plant safety. Engineering support will be provided on an as-needed basis. At a minimum, the existing facility will be restored to the level it can be safely operated by experienced operators.

b) Most Probable Case – Intermittent Damage

The 'Most Probable Damage' scenario assumes no damage in the southern Iraqi oil fields and 50 percent of the maximum damage in the northern oil fields. Assessment teams will identify the key equipment to be specked out and purchased.

c) Worst Case – Major Damage to Existing Facilities

Engineering and constructing new facilities is the worst case scenario for expediency, but is the best scenario from a safety and reliability perspective. New facilities will be engineered to meet basic safety practices followed throughout the industry. Since the detailed engineering will be performed at the BRS the Home Office, deliverables can be developed before the expatriate startup team is mobilized.

d) Assessment Teams

When hostilities have ended and the sites are benign, Assessment Teams will be sent to inspect designated sites. Assessment Team members will evaluate each facility and make recommendations as to either repair or replace the vessels and/or equipment. One Health Safety Environmental (HSE) specialist will be assigned to each team. Sabotage is a major concern, field activities must include analyzing the crude oil for contaminants such as arsenic before trying to process it in any of the refineries.

b. **Tasks.**

1) **Home Office Activities.** The following examples illustrate typical Home Office activities to support the engineering, startup and operation of any hydrocarbon or chemical processing plant. Home Office activities will be more intensive in the "worst case" and "most likely case" secenarios where new facilities are being engineered. Specialists in plant operations and plant maintenance perform the following activities:

a) Participate in P&ID (Piping & Instrument Diagrams) and safety hazard reviews to make certain the plant is safe, operable and maintainable.
b) Develop operating manuals covering startup, normal operation, normal shutdown and emergency shutdowns. Operating manuals for existing units will be more difficult to produce than manuals for new units.
c) Develop precommissioning procedures to cover the cleaning and conditioning of the new units when the construction force turns it over to the startup team. This activity can also be performed in the field.
d) Develop System Priority/Turnover Identification Packages.
e) Review precommissioning activities. These reviews determine the number, type and size of gaskets, seals, packing etc. required for precommissioning and commissions the equipment.
f) Develop a lube oil schedule which indicates the quantity and quality of lube oil and grease used on all rotating equipment. The schedule also indicates the frequency and elapsed time period between each lubrication check, replacement and quality analysis.
g) Develop vendor servicemen schedules so that vendors can be mobilized to site in a timely manner.
h) Develop preliminary startup schedules that field operations will event use to bring the facilities on line. Field operations will modify the preliminary schedules to reflect "as built" conditions.
i) Develop a maintenance manual to support the normal day to day maintenance activities for the equipment installed in the plants.

c. **Recruiting.** To staff existing facilities with personnel other than current HCN employees will require an intense recruiting effort and a comprehensive training program.

1) A recruiting team will define position requirements, identify, interview potential candidates, recruit and mobilize successful candidates. Candidates can be acquired from various sources.

a) Senior management and engineering level positions can normally be filled from within the BRS/KBR organization.

b) Senior operations and maintenance personnel can come from BRS/KBR full time workforce or from contract personnel who have worked as direct hires for BRS/KBR on past projects.

c) Recruiting agencies "body shops" are also available world wide which can supply candidates for senior management and/or maintenance positions.

d) Unskilled positions such as laborers are normally recruited from developing countries.

d. **Operations Training.** Recruiting operations and maintenance personnel with five years experience in refinery and/or petrochemical plants operation gives us a workforce that only needs

to be familiarized with the process and equipment of the facility they are assigned to. Six months of classroom and on-the-job training (OJT) will prepare these experienced people to safely operate and maintain the typical hydrocarbon processing unit.

If the existing unit is safe and ready for start-up (RFSU) a 60 percent – 40 percent ratio of experienced and apprentice expatriate operations & maintenance personnel should be able to have the unit back on line in nine months or less. The apprentice personnel will continue their OJT while the unit is in service.

Training maintenance personnel is more time consuming. Training programs for some crafts can take up to four years.

The training required for a successful plant startup can be provided by BRS in cooperation with designated equipment suppliers. The training program for the operations department will be sub-divided into two categories designed for the supervisory staff and the general plant operations personnel. These programs will focus on preparing qualified supervisory and operating staff for the facility.

Supervisors will begin their training with an induction course. This course will outline the basic design of the complex, the plant project and schedule, and focus on the design, operation and maintenance of specific pieces of equipment. Special classroom and on-the-job training (OJT) programs will be developed for the operations supervisors of each facility.

All training will be provided for operations personnel at the job site. Details of the process operations will be presented in classroom training sessions followed by a structured field OJT program.

Classroom training will be divided into specific subject areas as follows:

- Process description and operating principles
- Description and details of special equipment
- Process control and Instrumentation
- Start-up and shutdown requirements and precautions
- Trouble shooting and abnormal / emergency conditions

e. **Maintenace Training.** Maintenance personnel will be given an orientation and introduction to the planned operation of the facility. Classroom training modules will be developed to help the maintenance personnel become familiar with the various process operations and be able to locate equipment and instrumentation in the field and identify the functionality of equipment and instrumentation systems

OJT will provide job-specific field training for selected equipment of the new facility. OJT checklists will be developed for training and regular use, which will consist of facility-specific checklists for predictive and preventative maintenance of the equipment. Supervisory personnel will use these checklists to train and evaluate the performance of the equipment / systems and personnel.

f. **Field Activities.** The Startup Plan is based on the premise that expatriate and HCNs will be utilized initially; the ultimate goal is to relinquish operating and maintenance functions to HCNs. A recruiting team will define position requirements, identify and interview potential candidates and recruit and mobilize successful candidates. Emphasis will be placed on using existing Iraqi

personnel and organizations whenever possible, subject to and consistent with guidance from appropriate authorites. When HCNs are not available or appropriate, it is anticipated that expatriates and TCNs from Great Britain and Canada will initially staff the senior positions. Intermediate positions will be filled with HCNs or TCNs recruited from developing countries.

SITES	O&M Manpower
NORTHERN OILFIELDS: (7)	
Kirkuk Baba GOSP = 144,000 BPD Shurau GOSP = 107,000 BPD Hanjira GOSP = 97,000 BPD Quton GOSP = 64,000 BPD Saralu GOSP = 144,000 BPD Sarbashakah GOSP = 144,000 BPD	120
Bay Hassan North GOSP = 40,000 BPD South GOSP = 40,000 BPD	9
Saddam Saddam GOSP = 40,000 BPD	6
Khabaz Khabaz GOSP = 40,000 BPD	6
Jambur Jambur GOSP = 5,000 BPD North GOSP = 5,000 BPD South GOSP = 10,000 BPD	6
Qayyarah Group Qayyarah GOSP = 5,000 BPD Najmah GOSP = 5,000 BPD Jawan GOSP = 5,000 BPD Qasab GOSP = 5,000 BPD	9
Ayn Zalah Zalah GOSP = 8,000 BPD Butmah GOSP = 7,000 BPD	6
Total Manpower Loading (19 GOSPs)	162

SITES	O&M Manpower
SOUTHERN OILFIELDS (14)	
Rumailah North	160
NR Central GOSP = 117,000 BPD	
NR GOSP 2 = 112,000 BPD	
NR Janubia GOSP = 165,000 BPD	
NR GOSP 4 = 201,000 BPD	
NR GOSP 5 = 204,000 BPD	
North Shamiya GOSP = 66,000 BPD	
Rumailah South	80
Qurainat 1Q = 121,000 BPD	
Shamiya 2S = 180,000 BPD	
GOSP 3R = 234,000 BPD	
Janubia 4J = 165,000 BPD	
Az Zubayr	100
AZ Central GOSP = 57,000 BPD	
AZ GOSP #1 = 92,000 BPD	
AZ GOSP #2 = 30,000 BPD	
AZ GOSP #3 = 26,000 BPD	
AZ GOSP #4 = 45,000 BPD	
Hammar GOSP = 0 BPD	
West Qurnah	60
WQ CGS-6 U/C = 32,000 BPD	
WQ 'CGS-7 U/C = 111,000 BPD	
WQ CGS-8 U/C = 107,000 BPD	
Buzurgan	6
North GOSP = 7,500 BPD	
Southern GOSP # 1 = 7,500	
Southern GOSP # 2 = 7,500	
Southern GOSP # 3 = 7,500	
Al Luhays	12
Al Luhays GOSP = 40,000 BPD	
Nasiriyah	6
Nasiriyah GOSP = 30,000 BPD	
Majnoon	6
Majnoon GOSP = 25,000 BPD	
Jabal Fauqi	6
JF North GOSP = 20,000 BPD	
JF South GOSP = 20,000 BPD	

SITES	O&M Manpower
East Baghdad Baghdad GOSP = 30,000 BPD	6
Abu Ghurab AG North GOSP = 15,000 BPD AG South GOSP = 15,000 BPD	6
Subba Subba GOSP = 10,000 BPD	6
Halfaya Halfaya GOSP = 10,000 BPD	6
Nahr Umar Nahr Umar GOSP = 10,000 BPD	6
Total Manpower Loading (14 South Oil Fields - 33 GOSPs)	466
C: Pump Stations:	
K-1 = 1,500,000 BPD	24
K-2 = 1,500,000 BPD	24
K-3 = 1,400,000 BPD	24
IT-1 = 1,000,000 BPD	18
IT-1A = (Insufficient Data)	18
IT-2 = 1,000,000	18
IT-2A = 1,000,000	18
IT-3 = (Insufficient Data)	18
IT-3A = (Insufficient Data)	18
Strategic P/L PS-1 = 980,000 BPD	18
Strategic P/L PS-2 = 980,000 BPD	18
North Rumailah Central GOSP = 840,000 BPD	18
North Rumailah Central Gathering Station = 1,700,000 BPD	24
Zubair-1 (Z-1) = 1,700,000 BPD	24
Buzurgan Complex EX PST = 200,000 BPD	12
Avanah Pump Station = 520,000 BPD	12
IPSA-1 = 1,600,000 BPD	18
IPSA-2 = 1,600,000	18
Al Faw South = 4,288,000	48
Total Manpower Loading (20 Pump Stations)	420
Terminals:	
Mina Al Bakr Platforms A & B	36
Other Plants:	
Kirkuk H_2S Removal Plant & Stabilizer Trains	76
Total O&M Staffing Requirements	1160

It is estimated that it will require 1,160 people to startup, operate, and maintain the facilities as illustrated in the table above. The staffing estimate only reflects personnel required to safely operate and maintain the facilities. Assessment Teams will define actual staffing requirements by facility.

The following activities would be considered as typical for O&M personnel to support the startup and operation of a new facility (worst case):

- Operations and maintenance specialists will arrive at the site approximately two months before the turnover of the first system to start preparations for the precommissioning and commissioning of the facility. The specialists will review any procedures that were developed during the home office phase and correct them where necessary to reflect "as built" conditions. Additional procedures will be developed where necessary. These procedures will be in place before the facility is started.
- Vendor service technicians will be brought in at this time to support the precommissioning and commissioning or startup activities.
- When construction turns a system over, operations will inspect it and note any items that need corrected. When the system is accepted by operations, it is ready for precommissioning.
- Operators and maintenance personnel, with craft support from construction, will precommission and commission the unit.
- When precommissioning activities are completed, the facility is considered ready for startup.
- Operations and maintenance specialist will remain at site until such time the care, custody and control of the facility can be safely turned over to the local authorities.

g. Site Descriptions.

1) **Northern Region:** Oil produced in the north contains lethal concentrations of hydrogen sulfide (H_2S) gas. Personnel working in the north will require personnel protective equipment (PPE) and specific training to address the H_2S hazard.

2) **Southern Region:** Most activity will occur in the south. The oil produced from the Rumailah fields does not contain high concentrations of H_2S gas.

3) **Well-Heads:** Operator interaction with the well heads involves starting and stopping individual well head flows as directed by the Reservoir Manager. Manpower loading will ultimately be affected by the number of wells to be controlled and the area to be covered.

4) **Flowlines:** Well head operators will monitor the flow lines from the well heads to the GOSPs for leaks. Most flowlines are assumed to be eight inches or less in diameter. The lengths of flowlines typically range from a few hundreds of feet to five or more miles. Maintenance personnel from the closest GOSPs will repair any leaks.

5) **Major Pump Stations:** There will be six to 10 large pumps included in the restoration (worst case) of the major pump stations. It is assumed that all the major valves will be opened and closed manually. There will be one gas turbine generator and one emergency generator installed at each station. Operations will work 24 hours per day seven days per week. Maintenance will normally work dayshift seven days per week. Reliable communication is essential for coordinating safe operation between the numerous pump stations.

6) **Gas Oil Separation Plants**: The proposed new GOSPs (worst case) consist mainly of large separation vessels, pumps and auxiliary equipment such as gas turbine generators, small compressors, and ground flares. Demulsifier chemicals are added upstream of the high pressure production traps and low pressure production traps to help separate the water from the oil. Controlling the demulsifier injection rate to optimize water removal is one of the most critical operator functions. The new GOSPs will be constructed next to existing GOSPs that were destroyed at the following locations:

   The last step of oil degassing is completed in the low pressure degassing boots at the North Rumailah Gathering Center and the IPSA 1 pump station. The degassing boot and stock tank operates near atmospheric pressure by sending the flashed gas to a ground flare. The oil from the degassing boot flows into a stock tank. Booster pumps take suction on the stock tank and pump the oil to the suction of the pipeline pumps. Operations will work 24 hours per day, seven days per week . Maintenance will normally work dayshift seven days per week.

7) **Stabilizer Trains**: Two stabilizer trains are planned to remove the H_2S from the northern crude. Hydrogen sulfide gas poses a critical safety hazard that personnel working in the North Region must always be alert to. Each train can process up 300,000 barrels per day of unstabilized crude oil matching the generic GOSP capacity. Feed pumps are used to pump unstabilized crude from a surge drum to the distillation tower. The stabilizater train uses a gas fired heater and crude distillation tower to stabilize the crude. A bottoms pump tranfers stabilized crude through feed exchangers, air coolers and to tankage. Booster and shipping pumps are used to pump the crude into the export pipeline to Turkey or Al Faw. Operations will work 24 hours per day seven days per week. Maintenance will normally work dayshift seven days per week.

8) **Pipelines:** Operators will be responsible for opening & closing any manual valves located along the pipelines. They will also monitor the pipeline and report any signs of leakage. Operators will work 24 hours per day seven days per week. Maintenance activities will be handled by craft personnel from a central maintenance complex.

9) **Al Faw Onshore Terminal & Tankfarm:** In the beginning, additional booster and 300 MM BPD shipper pumps will be installed at the Al Faw South tank farm to pump 1.1 MM BPD of oil out to the Mina' Al Bakr export terminal. It is assumed that if no storage tanks are available, the operation will be straight through or "tight-line" from Zubair pumpstation. Operators will staff the facility 24 hours per day seven days per week. Maintenance will normally work days only and major maintenance activities will require additional craft or vendor support.

   a) **Export Option 1**: If Mina' Al Bakr export terminal is restored, it will have two berths, six hydraulically operated loading arms, two surge vessels, two drain pumps, one instrument air compressor, one emergency diesel power generator, four skid mounted power generators, two control buildings and various auxiliary equipment. Operations will staff the plant 24 hours per day seven days per week. Maintenance normally works the day shift only and major maintenance activities will require additional craft or vendor support.

   b) **Export Option 2**: If Single Point Moorings (SPM) are used, the equipment and manpower requirements for Mina' Al Bakr export terminal will disappear. The two metering stations will be located onshore at the Al Faw onshore terminal.

h. Staffing Existing Refineries:

The following table reflects the approximate manpower loading for typical refineries located on the Gulf Coast of the United States. The manpower only reflects regular, full time employees for barrels per calendar day (BCD) of refinery capacity.

U.S. Gulf Coast Refineries	BCD	Employees
BP-Amoco Refinery – Texas City, TX	437, 000	2100
Lyondell Citgo Refinery, Lubricant and Wax facility – Lake Charles, LA	320,000	1650
Lyondell Citgo Refinery – Houston, TX	274,000	1000
Valero Refinery – Three Rivers, TX	98,000	280

The typical U.S. refinery is highly automated which reduces the overall staffing requirements. Comparable refineries in Iraq would not be automated, requiring a greater number of operations and maintenance personnel. Assessment Teams will develop accurate manpower loading for existing Iraqi refineries.

4. SERVICE SUPPORT. See ANNEX I.

5. COMMAND AND SIGNAL. See Base PLAN and ANNEX H.

ACKNOWLEDGE:

(b)(6)
BRS PGM, LOGCAP

OFFICIAL:
(b)(6) BRS D/PGM

Tab A – Long Term O&M Strategy

TAB A (LONG TERM O&M STRATEGY) A to APPENDIX 4 (OPERATIONS & MAINTENANCE) to ANNEX F (CONSTRUCTION & ENGINEERING) to LOGCAP CONTINGENCY SUPPORT PLAN

REFERENCES. See ANNEX F, Appendix 4.

TIME ZONE USED THROUGHOUT THE PLAN. Iraq.

TASK ORGANIZATION. See ANNEX A.

1. SITUATION. See Base PLAN.

a. Assumptions.

1) Production and distribution activity will involve existing Iraqi personnel and organizations whenever possible, subject to and consistent with guidance from appropriate authorities.

2) The majority of the Iraqi workforce will remain at or return to work as permitted.

3) Security screening of Host Country Nationals (HCNs) will be handled by others.

4) BRS will work with the Government to identify a subcontractor to assume duties of the State Organization for Marketing Oil (SOMO), if required.

5) The Government will retain senior personnel for Executive Management.

6) Facilities will be started sequentially.

7) The entire oil infrastructure will not be in place before the first oil is exported.

8) Product distribution outlets are not part of the SOW.

9) BRS will operate the facilities initially and then relinquish them to HCNs.

10) Subcontractors will be utilized, as required, to support operations.

2. MISSION. See Base PLAN.

3. EXECUTION. See Base PLAN.

a. Concept of Operations.

1) Assess the impact on the project if Iraqi oil industry workers are not available for 30 days.

2) Assess the impact on the project if no Iraqi oil industry workers return to work.

3) Identify the main components of the Iraqi oil infrastructure.

4) Discuss the recruiting strategy for filling positions vacated by Iraqi oil industry workers.

5) Provide examples of typical positions that would normally be recruited for this type of project.

b. Tasks.

1) HCN "Sensitivity Analysis"

Due to the magnitude of the EVENT, 30 days of HCN non availability (versus 10 days) will have no impact on the overall cost and schedule. Under the best case scenario, it is

recommended that every effort is made to allow current HCN employees to remain at and continue to operate their facilities. In the most probable and worst case scenarios, it is questionable whether any facility would be ready for restart within 30 days and unlikely that the region will be secure enough in the first 30 days to attempt restarting a hydrocarbon processing facility.

This does not minimize the importance of returning experienced Iraqi operating and maintenance personnel to work. Their involvement not only expedites the assessment of the facilities but also provides a platform for expatriate personnel to partner with Iraqi personnel.

Key Iraqi operating and maintenance personnel should be identified early and given preference in the Government's security screening process. Ideally, HCNs will return to the work at their previously assigned facilities. Realistically, the Iraqi personnel should be assigned to facilities as required to expedite the startup strategy.

2) Oil Industry Labor force Does Not Return – Worst Case

In this case, all production refining internal distribution and exporting would cease until BRS could recruit and train sufficient operations and maintenance personnel. Most of the electrical generation would also cease because fuel gas and fuel oil is supplied by the oil industry. The only realistic solution in this scenario is to retain or promptly return current HCN employees to the oil facilities.

Operating the total oil infrastructure would require a significant influx of expatriate and Third Country National (TCN) personnel. Thousands of people would have to be identified and recruited to staff the vacant positions. It would be a time consuming, recruiting effort which should follow the schedule for restoration and startup of the facilities. It would take years to recruit and train replacement personnel to take over the duties of the entire oil infrastructure. It is assumed that the majority of the Iraqi workforce will return when they are permitted to do so.

The organization chart illustrated in **Figure 1** shows the hierarchy of the existing oil infrastructure and the magnitude of the proposed task. The chart is based on information derived from the Department of Energy website www.eia.doe.gov (Reference Iraq Country Analysis Brief for October 2002).

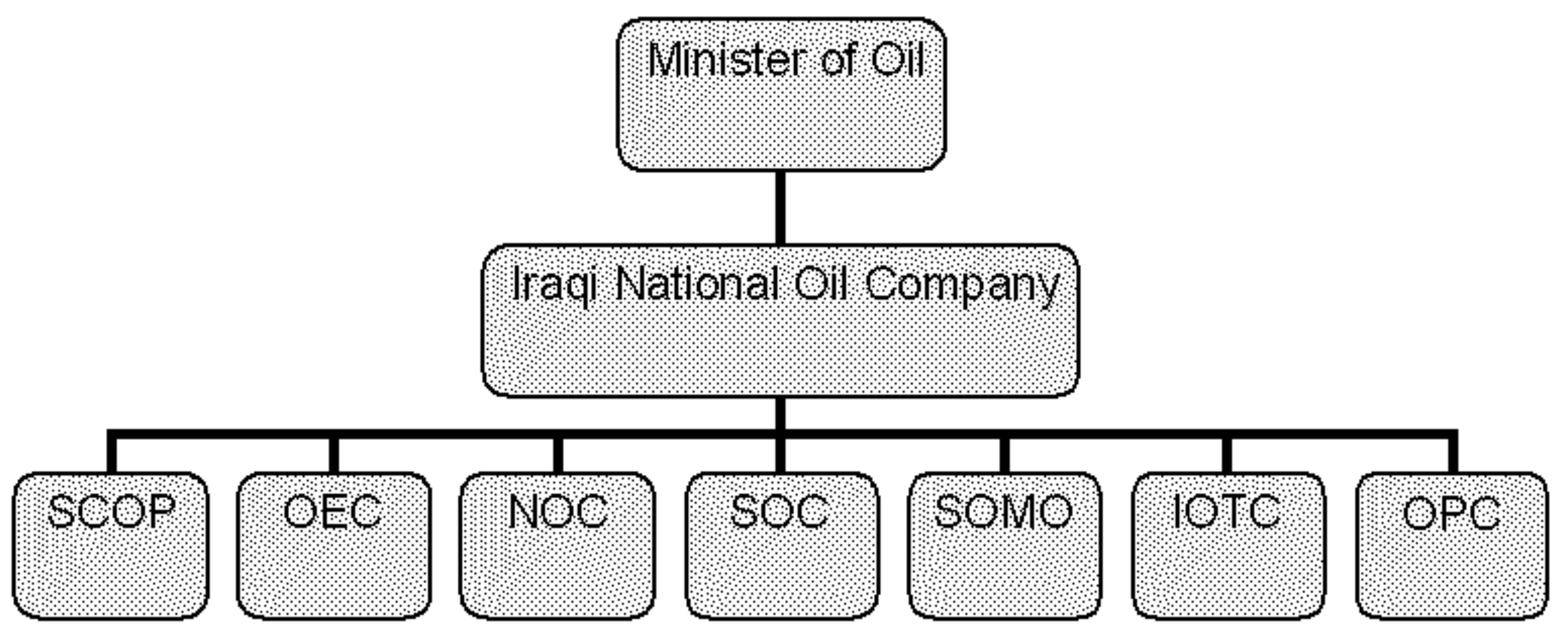

Figure 1. Iraq Oil Infrastructure Organization

The INOC directs the operation of the following autonomous companies:

a) The State Company for Oil Projects **(SCOP)** – Design and engineering of upstream and downstream projects.

b) The Oil Exploration Company **(OEC)** – Oil Exploration.

c) Northern Oil Company **(NOC)** – Upstream activities in northern Iraq.

d) Southern Oil Company **(SOC)** – Upstream activities in central & southern Iraq.

e) State Organization for Marketing Oil **(SOMO)** – Crude oil sales and OPEC relations.

f) Iraqi Oil Tankers Company **(IOTC)** and various departments within the Ministry of Oil – Distributes oil products, operate downstream natural gas/LPG projects and gas bottling plants.

g) Oil Projects Company **(OPC)** – Oversees the development of new Iraqi oil discoveries

Ultimately each of the autonomous companies, including the individual facilities, will have to be evaluated to identify the staffing requirements. Replacing any missing Iraqi personnel will require a well planned recruiting effort sequenced to follow the restoration schedule.

3) Recruiting Strategy.

The size of the project requires multiple recruiting teams. Emphasis will be place on hiring HCNs wherever possible. The recruiting teams will:

a) Define the positions that need to be staffed

b) Define the position requirements

c) Identify and interview potential candidates

d) Recruit and mobilize successful candidates

Candidates can be acquired from various sources.

a) Senior "Plant Management" and engineering level positions can be filled from within the BRS/KBR organization.

b) Senior operations and maintenance personnel can come from BRS/KBR full time workforce or from contract personnel who have worked as direct hires for BRS/KBR on past projects.

c) Recruiting agencies "body shops" are also available world wide which can supply candidates for senior management and/or maintenance positions.

d) Recruiting teams work inside Iraq.

e) Unskilled positions such as laborers are normally recruited by teams who travel to developing countries.

The organization chart in **Figure 2** (next page) illustrates typical positions for a company such as the Southern Oil Company. The chart is provided to illustrate the magnitude of the recruiting effort that would be required if all positions had to be filled.

SOUTHERN OIL COMPANY

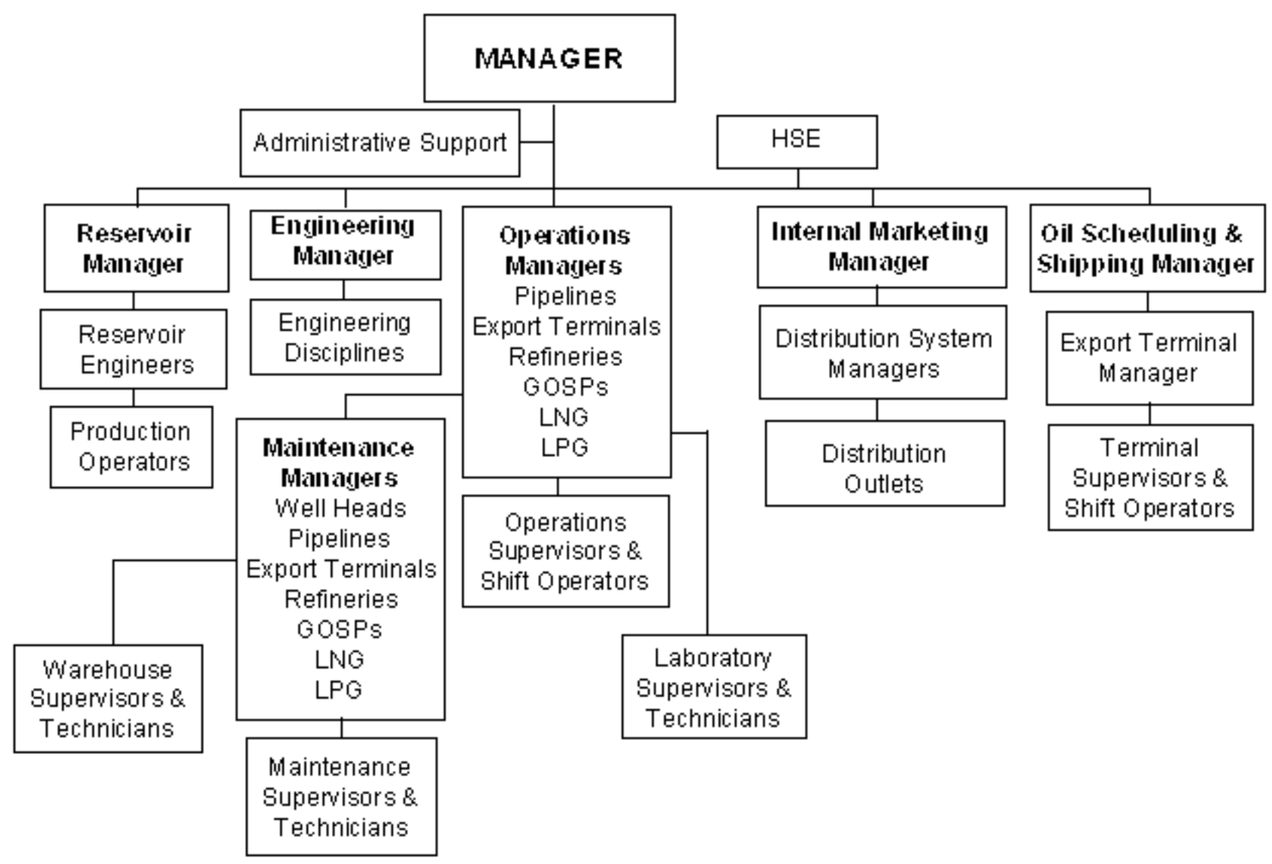

Figure 2. Southern Oil Company Organization Chart

Each facility within the Southern Oil Company would have its own organization chart. The most advisable approach would be to continue with the existing organizational structure, making modifications as required to make it more efficient.

4) Potential Candidates

BRS assumes that the senior operations and maintenance positions will initially be staffed by expatriates with the remaining positions going to HCNs and TCNs in that order. Actual staffing requirements will be determined by the size and the complexity of the facility. The ensuing list illustrates a portion of the positions (including qualifications) that recruiting teams may have to fill to address vacancies in the Iraqi Oil Infrastructure:

- Plant Manager(s)
- Safety and Security Manager(s)
- Operations Manager(s)
- Plant Shift Superintendent(s)
- Support Shift Leader(s)
- Control Board Operator(s) – Process Units
- Field Operator(s) – Process Units
- Control Board Operator(s) (Utilities / Offsites)
- Field Operator(s) (Utilities / Offsites)
- Laboratory and Environmental Superintendent(s)
- Laboratory Analyst(s)
- Warehouse Supervisor(s)
- Maintenance Manager(s)
- Mechanical Maintenance Superintendent(s)

- Static / Piping Equipment Supervisor(s)
- Piping Specialist(s)
- Civil Works Specialist(s)
- Insulation, Paint & Metallurgical Specialist(s)
- Rotating Equipment Supervisor(s)
- Rotating Equipment Specialist(s) - Power Gen., Gas Turbine, Comp., Pumps and Valves
- Mechanical Workshop Supervisor(s)
- Instrument Maintenance Superintendent(s)
- Instrumentation Systems Supervisor(s)
- Communications / Electronic Equipment Shop Supervisor(s)
- DCS Specialist(s) – Assumes that some of the instrument systems will be upgraded
- Electrical Maintenance Superintendent(s)
- Electrical Systems Supervisor(s)
- Electrical Shop High / Low Voltage Equipment Technician(s)
- Maintenance Office Superintendent(s)
- Maintenance Planning Engineer(s)
- Maintenance Work-Order Processors / Scheduler(s)
- Plant Technical Services Manager(s)
- Senior Engineering Services Engineer(s)
- Process Engineer(s)
- Mechanical Engineer(s)
- Instrument Engineer(s)
- Electrical Engineer(s)
- Technical Office Draftsman / CAD Operator(s)
- Document Control Specialist(s)
- Senior Quality Control Engineer(s)
- Equipment Inspector(s)
- Senior Training Services Engineer(s)
- Operations Trainer(s)

4. **SERVICE SUPPORT.** See ANNEX I.

5. **COMMAND AND SIGNAL.** See Base PLAN and ANNEX H.

ACKNOWLEDGE:

(b)(6)
BRS PGM, LOGCAP

OFFICIAL:
(b)(6) BRS D/PGM

APPENDIX 5 (ENVIRONMENTAL REMEDIATION) to ANNEX F (ENGINEERING AND CONSTRUCTION) to LOGCAP CONTINGENCY SUPPORT PLAN

REFERENCES. See ANNEX N, Appendix 4.

TIME ZONE USED THROUGHOUT THE PLAN. Iraq.

TASK ORGANIZATION. See ANNEX A.

1. **SITUATION.** See Base PLAN.

   a. **Assumptions:**

      1) Environmental plan assumes a "worst-case" scenario.

      2) If introduction of crude oil into a waterway is an act of war, it is also assumed that friendly forces would soon have control of the area surrounding the spill site.

2. **MISSION.** See Base PLAN.

3. **EXECUTION.** See Base PLAN.

   a. **Concept of Operations.** BRS deploys Assessment Teams to the Iraq oil fields to determine extent of damage and initial requirements for restoration of crude oil production. Assessment Teams will assess environmental damage created by the crude oil production system, including environmental damage to land, sea and air. For planning purposes, the 'worst case' scope is assumed to be a repeat of the February 1991 destruction in Kuwait.

      1) **Advanced Party Assessment.** The Advance Party will make the initial determination of the amount of environmental damage. Depending on the amount of environmental damage, the follow-on Assessment Teams will be augmented by environmental specialists or special environmental Assessment Teams will be formed. Each team will consist of or be augmented by a Petroleum Engineer, an Environmental Manager, and hazardous material (HAZMAT) specialists as required to plan and execute remediation efforts.

      2) **Priority of remediation efforts are as follows:**

         a) Contamination of waterways which directly impact the health and welfare of humans or their life support systems. This includes crude oil being introduced into waterways that feed desalination plants, cooling systems for electrical generating plants, fresh water lakes, rivers or other bodies of water which supply water for human consumption, fishing grounds and other such areas which provide food products for human consumption.

         b) Contamination of land, the atmospheric or bodies of water including groundwater, which directly threatens the human population.

         c) Contamination of land, the atmospheric or bodies of water which threatens food stuffs including crops and animals.

d) Contamination of land, the atmospheric or bodies of water which does not pose an immediate threat to humans or food stuffs, but does pose threat to human health. This includes oil fires, large bodies or pools of petroleum laying on the surface, surface oil which has soaked into the earth but is not lying in pools.

e) Contaminated land, the atmosphere or bodies of water which does not pose an immediate threat to humans or foodstuffs, but does pose a long term threat to the environment.

f) Contamination left by the routine processing of crude oil.

3) Contamination of Waterways: The worst case scenario is crude oil entering waterways that feed the desalination plants of Kuwait and Saudi Arabia. This event, attempted in the latter phases of the Gulf War in 1991, was considered to be one of the worst examples of purposeful damage to the environment.

a) Remediation: Remedial actions would vary, depending on the source of contamination. The most likely scenario would be the release of crude oil from the offshore loading facilities at the Mina Al Bakr Crude Oil Export Terminal and the Khar Al Amaya Crude Oil Export Terminal. Assuming one or both of these terminals were compromised the following steps would be taken:

(1) Turn off the flow at the source. The best method is to close the spigots at the source, or upstream of the source at the land based pumping station. This would mean shutting off the flow at the terminal or interdiction of the oil flow from the pipeline at or below the FAW pumping station. This could be as simple as turning off the switches, shutting the spigots manually, interrupting the power grid or as destructive as interdiction by force, including reducing by force the electrical grid, generators or the pumps and pipelines themselves. Worst case scenario would be the destruction of the holding tanks which support the ocean terminals. In a benign environment, BRS will provide the expertise and manpower necessary to turn off the flow. This could include immediate repairs to damaged tank bunds. In a non-benign environment BRS will provide expertise and advice.

(2) Contain the spilled contaminant: Wind, weather, tides, shipping, hostilities, time and other factors will affect the course and effect of the spill. Assuming a benign environment, BRS will, concurrent with (1) above, lay floating booms of an appropriate type into position to contain as much of the spill as possible, corralling and or absorbing the contaminant. BRS will use floating skimmers to recover the contaminant and pump it into a receiving vessel, on land or at sea. A diesel powered vacuum pump will be used to accomplish this. The oil receiving vessels can be obtained locally and are of various sizes including barges, ship mounted tanks, trailer mounted tanks, slop oil tanks at the terminals, tank trucks, etc.. The oil will be transported to a larger tank, possibly an existing tank at the terminal, where it will be allowed to sit and to separate into oil and water fractions. The water will be treated in a treatment plant and the oil will be mixed with crude and sent to a refinery or exported. BRS will clean up shore spills, including the remediation of damage to wildlife. Shore spills of oil will be cleaned up in the same manner as land spills described in (4)(a) below. If the spill is widely dispersed over the sea and too thin to contain with booms, a special bacteria can be sprayed on the oil which will eventually eat the oil or absorbent booms can be deployed. BRS plans to initially deploy six 10 gpm oil skimmers with vacuum pumps and 10000 feet of 8 inch deep non-

absorbent PVC booms. Offshore supply boats are ideal for such tasks, although fishing trawlers and other types of boats can also be used.

(3) Worst Case Scenario: The worst case scenario would be the uncontrollable introduction of contaminants into waterways. This would represent a "tanker sized" or multiple tank sized spill. Immediate activation of companies that specialize in containing and remediating these spills would have to be initiated. Site access would be blocked by ongoing actions, or these companies would not be able to arrive on the site quick enough to prevent damage to the environment and to water supplies. As a last resort, ignition of the contaminant would be considered, as the damage to humans and animals that rely on unpolluted water would outweigh the atmospheric damage. BRS would only endorse or undertake this action with express guidance from CENTCOM. Any remaining oil would have to be collected as described in (2) above.

4) Contamination of Land: The worst case scenario is purposeful introduction of contaminants on land via the destruction of the crude oil production system. This type of destruction was witnessed in February 1991 in Kuwait where wellheads were purposefully destroyed and ultimately created lakes of crude oil.

a) Remediation: Assessment Team(s) will determine the extent of damage and make initial remediation recommendations. Based on this information, the BRS Home Office will develop a targeted and prioritized remediation plan. On site, BRS will:

(1) Pump free oil into tank trucks using diesel powered diaphragm type sucker pumps which can pump up to 100 gpm.

(2) Transport the free oil to the nearest refinery crude tank or oil terminal crude tank, then discharge into the tank.

(3) Remove the contaminated soil using earth moving equipment, such as two-yard wheeled front end loaders for large areas and smaller equipment down to shovels for smaller areas.

(4) Transport the soil in liquid tight HAZMAT 12 to 16 cu. yd. dump trucks to a storage area for further treatment. Generally three such trucks are allowed for each front end loader. Thus a remediation unit would consist of one sucker pump with hoses, locally obtained tank trucks as needed, one front end loader, and three HAZMAT dump trucks.

(5) Test the underlying soil to ensure all contamination has been removed. When tests confirm all contamination has been removed then move to the next site. Generally, when the field test shows Total Petroleum Hydrocarbons (TPH) to be less than 100 ppm, the soil will be considered uncontaminated.

(6) Build, manage, and operate one or more soil thermal treatment plant(s). These plants are trailer mounted, are semi-mobile and can be relocated. A soil thermal unit heats the soil until the water and oil are driven off. The oil and water are recovered separately and the oil free soil is innocuous and can be returned to the environment. Water is distilled water and can be discharged anywhere. The oil is either burned in the thermal unit for heat or is transported to the refinery or terminal crude tanks. The "standard" thermal unit can treat up to four tons per hour of fairly dry soil, approximately 4 cu. yds. per hour.

It is possible to remediate soil using bacteria, however this method takes up to five years and requires water, bacteria, bacteria food, and periodic tilling of the soil to accomplish.

(7) Reintroduce treated and uncontaminated soil back into the environment. The soil can be returned to its original location or can be used for fill. Decontaminate the trucks and wheeled front end loaders.

5) **Atmospheric Contamination**: Atmospheric contamination would occur in the worst case scenario by the ignition of wellheads and other components of the crude oil production system, including tank farms and other holding facilities. A wellhead fire results in incomplete combustion of the oil. The result is soot and volatile hydrocarbons containing carcinogenic and toxic compounds are discharged into the atmosphere. In addition, there could be lethal Hydrogen Sulfide (H_2S) in the oil and/or gas coming from the well. If H_2S gas is present, BRS will ignite the well to burn the gas until the well can be capped. The soot, volatile hydrocarbons, and H_2S from ground flares, and lead from burning heavily leaded gasoline contaminates the ambient air. Samples of ambient air will be taken to assess the level of pollution.

a) **Remediation**: Stopping the contamination at the source is the best course of action.

(1) **Wellhead Fires**: In most cases it is best to allow the wellhead to burn until the resources to extinguish and cap the well are available. This is particularly true if the well contains H_2S. The atmosphere will suffer less damage, though more visible, from oil fire smoke than from open lakes of oil evaporating hydrocarbons into the atmosphere. On a prioritized basis, BRS will extinguish wellhead fires and cap the wellhead. Following this, the remediation of the contaminated earth around the wellhead will occur as described in (4)(a) above.

(2) **"Coke" from Well Fire.** When the wells burn uncontrolled, a solid material called "coke" is produced and builds up around the well. This material is not really petroleum coke, which is a hard black rock like material from coking ovens in a refinery, rather it is a mixture of asphalt, unburned oil, and tar. These are the materials that either have an ignition point greater than the heat of the fire, which is probably 600 to 900 degrees F, or materials that have escaped combustion by being blown away from the fire at the edges. This gooey, oily mass will be removed with front end loaders and stored in lined and bermed or bunded areas until it is coked in a refinery coking oven or incinerated.

(3) **Oil Storage Tank Fires**: An attempt will be made to control the fires using the existing fire fighting equipment. It is likely, however, that the equipment will be inoperable and these fires will burn themselves out. Once the fire is extinguished, BRS will provide remediation for residual petroleum and other contaminants. Bunds around tanks, particularly burning tanks, may need to be reinforced to prevent leakage or fire from the tanks from spreading. After the tanks have been brought under control, soil would be remediated as in (4)(a) above.

(4) **GOSPs**: Burning GOSPs present a major problem and BRS is ideally suited to respond in this case. Interdicting the fuel source is usually the best and quickest way to extinguish the GOSP fire. This is done at the upstream side, toward the wellhead. Residual oil in the GOSP would, in most cases, have burned itself out before BRS can extinguish it. If not, the existing fire equipment will be used to extinguish the fire;

however, it is likely the existing equipment is either nonexistent or non-operable. Thereafter remediation efforts would be affected. If so damaged, the GOSP would most likely be abandoned. Again soil would be remediated as in (4)(a) above.

(5) **Refineries**: BRS will develop a course of action for a burning refinery, assuming that existing fire fighting equipment is either non-existent or inoperable. It may be necessary to allow the fires to burn themselves out, contain the damage, and abandon the refinery. The atmospheric contamination would probably not be as damaging as the contaminants in a refinery if allowed to flow freely on the ground. Soil would be remediated as in (4)(a) above.

(6) **Water and Ocean Oil Spills.** Based on the capacities of the five pipelines, a spill would be roughly equivalent to that of a supertanker. It is likely that this spill, if it occurs, will happen early in the conflict and the BRS response will delayed. By then, the oil will have spread over a wide area, damaging waterways, underwater areas, and beaches. The BRS response includes sufficient booms to enclose a four square mile area, two ocean-going, self-propelled, 50 gpm oil skimmers, and oil spill remediation bacteria and absorbents. BRS will rent an agricultural spraying plane to disperse the bacteria over the oil slick. Beaches will have to be cleaned up and the beach sand or rocks will have to be remediated in the same manner as oil field contaminated soil, namely with thermal desorbtion units.

6) **Best Case Scenario**:

The overall condition of the Iraqi oil facilities is "lamentable" at best as described in the U. N. Expert Report dated March 2000. This report notes that: "The issues of .....environmental damage require urgent and immediate attention as no improvement has been noted since the groups March 1998 Report." The report notes that there are large oil spills throughout the facilities, and that refineries discharge essentially untreated sewage into the rivers. H_2S gas is escaping from pipes and wells, and the H_2S removal facilities are not working. The environmental damage caused by the current operation of the facilities is significant and will require a substantial remediation effort. Assessment Teams will conduct a thorough evaluation of the existing facilities and BRS will make recommendations as the facilities become available.

4. MATERIAL AND SERVICES. See Base PLAN.

5. COMMAND AND SIGNAL. See Base PLAN and ANNEX H.

ACKNOWLEDGE

(b)(6)
BRS PGM, LOGCAP

OFFICIAL:
(b)(6) BRS D/PGM