4, [redacted]

ENCLOSURE B

~~TOP SECRET~~

Copy 13 of 40 copies

each of 109 sheets

INVENTORY APR 15 1964

LOANED

RETURN TO INSEG RECORDS FILE SECTION

INVENTORY FEB

OFFICE OF THE DIRECTOR OF DEFENSE RESEARCH AND ENGINEERING
Weapons Systems Evaluation Group
Washington 25, D.C.

INVENTORY NOV - 1965

PROCEDURAL ANALYSIS OF J-3 COMMAND AND CONTROL OPERATIONS DURING THE CUBAN CRISIS, OCTOBER 1962

13 December 1963

INVENTORY JAN 24 1975

(1967)

INVENTORY OCT 22 1968

LOANED

INVENTORY MAR 71

INVENTORY JAN 20 1972

THIS DOCUMENT AS A WHOLE IS CLASSIFIED ~~TOP SECRET~~.
INDIVIDUAL PORTIONS AND ATTACHMENTS HERETO
CARRY THEIR APPROPRIATE CLASSIFICATION.

RETIREMENT COPY

INVENTORY OCT 22 1968

INVENTORY MAY 13 1968

GROUP-1
EXCLUDED FROM AUTOMATIC
DOWNGRADING AND DECLASSIFICATION

EXCLUDED FROM THE GDS

"NATIONAL SECURITY INFORMATION"
"Unauthorized Disclosure Subject to Criminal Sanctions"

21 FEB 1971

This material contains information affecting the national defense of the United States within the meaning of the Espionage Laws (Title 18, U.S.C., sections 793 and 794), the transmission or revelation of which in any manner to an unauthorized person is prohibited by law.

Reproduction of this document in whole or in part is prohibited except with permission of the issuing office.

BRACKETED PORTIONS
MMENDED FOR
MODDING

INVENTORY MAR 5 1978

SO FOI 997

OASD(PA) DFOISR 81 -TS- 141 (4)

R-1

EXCISED UNDER THE PROVISIONS OF THE FREEDOM OF INFORMATION ACT 5USC552
(b) (1) 80-FOI-0997

OSJCS/DOC DIV
CY R-9
FOI 637A

~~TOP SECRET~~

095143

Log No. ~~TS-63-587~~

F.T.24

IDA TS-66-381

81-XOXXJ-139

ATCH 2

TOP SECRET

FOREWORD

This Enclosure is part of a study of command and control processes involved in the Cuban crisis of October - December 1962. The scope of the entire study is as follows:

Basic Paper

Enclosure "A" - Historical Analysis of the Substance of Command and Control Actions, Their Circumstances, and Their Implications.

Enclosure "B" - Procedural Analysis of J-3 Command and Control Operations during the Cuban Crisis, October 1962

Enclosure "C" - Functional Analysis of Command and Control Information Flow in the Joint Staff

Enclosure "D" - Analysis of Command and Control in the Service War Rooms in Support of Joint Staff Operations

TOP SECRET

ENCLOSURE B

PROCEDURAL ANALYSIS OF J-3 COMMAND AND CONTROL OPERATIONS DURING THE CUBAN CRISIS, OCTOBER 1962

TABLE OF CONTENTS

	Page No.
PREFACE	
INTRODUCTION	1
PURPOSE	1
SCOPE AND LIMITATIONS	2
DISCUSSION	4
THE PRECRISIS CONCEPT OF OPERATIONS	4
INITIAL ACTIVITIES AND AUGMENTATION OF THE WATCH (15-21 OCTOBER)	10
JOINT BATTLE STAFF OPERATIONS (21 OCTOBER-12 NOVEMBER)	15
THE PHASE-OUT PERIOD (12 NOVEMBER-6 DECEMBER)	29
SUMMARY OBSERVATIONS	30
THE CONCEPT OF OPERATIONS	31
ADMINISTRATIVE OPERATIONS	31
BRIEFINGS	32
DEBRIEFINGS	33
THE MASTER CHECK LIST	34
CONTINGENCY PLAN IMPLEMENTATION PROCEDURES	35
MESSAGE-PROCESSING PROCEDURES	35
ACTION OFFICERS	36
THE SITREP	38
INFORMATION SUPPORT OPERATIONS	39
RELOCATION OF THE ALERT CADRE	40
APPENDICES	
APPENDIX A - JOINT BATTLE STAFF TEAM PROCEDURES	41
APPENDIX B - J-3 BRANCH OPERATIONS	76
FIGURE 1 - ORGANIZATION - OVERALL	4a

TOP SECRET

TOP SECRET

PREFACE

The Office of the Joint Chiefs of Staff (OJCS) is a constantly changing organization. Each new issue of the OJCS organizational chart reveals numerous changes in organizational arrangements and in the personnel holding various positions. The guidelines and procedures by which the OJCS functions both in peacetime and under crisis conditions are similarly subject to modification and change based on the lessons learned from previous experiences and on necessary responses to changed circumstances.

Any description or analysis of the OJCS or its components as of a particular time period is therefore subject to some degree of obsolescence. This is particularly true of analyses, such as the present one, which are themselves intended as potential instruments of change.

The paper which follows describes the organization and procedures of the Operations Directorate (J-3) and other parts of the OJCS that were in effect at the time of the Cuban crisis, October-December 1962. An earlier draft, substantially similar to the present paper, was completed in April 1963, and shortly thereafter was made available to various J-3 offices for their review and comment. Partly in response to the problems noted in this paper and partly as a result of the J-3 Directorate's own internal analyses of needed improvements, some of the organizational and procedural arrangements described in this paper have undergone modification or revision.

Despite the various changes effected since the time this paper was written, many of the observations contained in it are of continuing relevance to the development of more effective

TOP SECRET

command and control procedures in crises. Some of the difficulties of OJCS operations revealed during the Cuban crisis point to basic operational problems that remain unsolved or, at least, require additional remedial action. In this sense, it is hoped that the present paper provides not only a useful historical reconstruction and point of reference but also a document of current relevance and timeliness.

ENCLOSURE "B"

C&C INTERNAL MEMORANDUM NO. 40

PROCEDURAL ANALYSIS OF J-3 COMMAND AND CONTROL OPERATIONS DURING THE CUBAN CRISIS, OCTOBER 1962

INTRODUCTION

1. This paper describes the operational procedures employed within J-3 during the Cuban crisis. The first part of the paper describes the general historical sequence of preparations for the impending crisis (15-21 October), the formation of the Joint Battle Staff (JBS) and its operation during the crisis (21 October-12 November), and gradual return to normal operations (12 November-6 December). Following the narrative, the major summary observations of the study are presented.

2. The appendices, which comprise the second part of the paper, present more specific information on the procedures employed by the JBS, the activities of several J-3 Branches closely associated with Cuban operations, and the procedural documentation research which supported the study. Each appendix contains more detailed observations and conclusions about the subject being discussed. Only the more salient ones have been brought forward into the first part of the paper.

PURPOSE

3. The purpose of an analysis of J-3 procedures associated with the Cuban crisis is to provide the Director, J-3, assistance in evaluating and improving operational procedures involved in crisis situations. As such, it is part of a larger study of the Cuban crisis authorized in J-3M-1418-62, dated 15 November 1962, and is in support of a more general WSEG requirement to provide the Organization of the Joint Chiefs of Staff (OJCS) assistance in developing an improved command and control capability.

4. Following the Cuban crisis, there was a general feeling in J-3 that much could be learned from operational experience gained during the Cuban crisis. It was felt that this situation could be treated like a large-scale exercise, and that the procedures employed during the crisis could be given the same postexercise analysis and evaluation that they would normally receive following exercises. However, in order to do this it would be necessary to develop a detailed historical reconstruction of procedures utilized by J-3 and the OJCS during the crisis period. This paper attempts to fulfill that requirement.

SCOPE AND LIMITATIONS

5. This study attempts to reconstruct how operational command and control activities were performed in J-3 during the Cuban crisis and to relate this to documented procedures which specified how they should be performed under conditions of increasing tension and crisis. It is based on an extensive analysis of procedural documentation in effect at the time of the crisis, on interviews with many of the participants, and on records made available following the crisis. Earlier drafts of this paper were reviewed by a number of the participants and other members of the J-3 staff. Their comments and suggestions, in many cases, have been incorporated into the present version of the paper.

6. The analysis is focused primarily on the Joint Battle Staff and on J-3 operations. The procedures used by the Joint Battle Staff during the crisis are described and compared with the procedural guidance available in pre-existing OJCS documents. Particular attention is devoted to the activities and procedures related to briefing and debriefing, the preparation of Situation Reports (SITREPs), the processing of message traffic, and the coordination of staff action (see Appendix "A").

7. The paper also describes the actions of several J-3 Divisions and Branches which were directly concerned with various aspects of the Cuban operation. Major attention is devoted to the Current Actions Center (CAC), the Emergency Actions Room (EAR), the Support Branch, the Status of Forces Branch, the LANT/CARIB Branch, and the General Operations Division (see Appendix B).

8. There are several limitations in the scope and comprehensiveness of the present analysis. The lack of access to certain types of data prevented detailed coverage of all Directorates and agencies which participated in the augmented watch and Joint Battle Staff operation. Thus, the activities of other (non-J-3) Directorates and of the liaison personnel from the Defense Intelligence Agency (DIA), the National Security Agency (NSA), and the State Department are only briefly mentioned. The limited amount of time for collection of data also prevented a more detailed analysis of the work of the J-3 action officers, and the activities of the Operations Plans Division and the Commands Branches (other than the LANT/CARIB Branch).

9. Finally, it should be noted that the present paper comprises one of a series of interrelated studies of the Cuban crisis. The basic paper and other enclosures provide both a general context and a series of supplementary analyses which serve to amplify and complement the findings reported here. This is especially true for Enclosure C, which presents a comprehensive analysis of message traffic during the Cuban crisis.

DISCUSSION

THE PRECRISIS CONCEPT OF OPERATIONS

10. At the time of the Cuban crisis, the most current and centralized source of procedures relating to contingency operations was the JCS document, CONTINUITY OF OPERATIONS OF THE ORGANIZATION OF THE JOINT CHIEFS OF STAFF (COOP-OJCS).[1/] This document, published on 27 August 1962, describes the basic concept of OJCS operations under crisis and emergency conditions and outlines the organization and procedures for the conduct of these operations. Figure 1 shows the overall organization that was in effect at the time of the Cuban crisis. The concept and procedures contained in the COOP-OJCS were tested in the HIGH HEELS II Command Post Exercise, held during the latter part of September 1962.[2/] The results of this exercise were still in the process of evaluation when the Cuban crisis broke. Thus, many of the procedures developed in the COOP-OJCS document and exercised during HIGH HEELS II were to be subjected to the additional test of an actual crisis.

11. The subsequent discussion attempts to reconstruct and describe J-3 operations during the Cuban crisis and to relate these activities to the established concepts and procedures contained in the COOP-OJCS.

12. The COOP-OJCS concept of operations assumes that the level of activity and the scope of functions to be performed by the OJCS will vary, depending on the nature and gravity of the situation. The concept envisages a gradient, ranging from "normal" cold war operations to general nuclear warfare. The different levels of threat and crisis within this range necessarily produce variations in the levels of activity, in

1/ JCS, 27 August 1962 SECRET.
2/ JCS Exercise OPLAN Exercise HIGH HEELS II, SECRET.

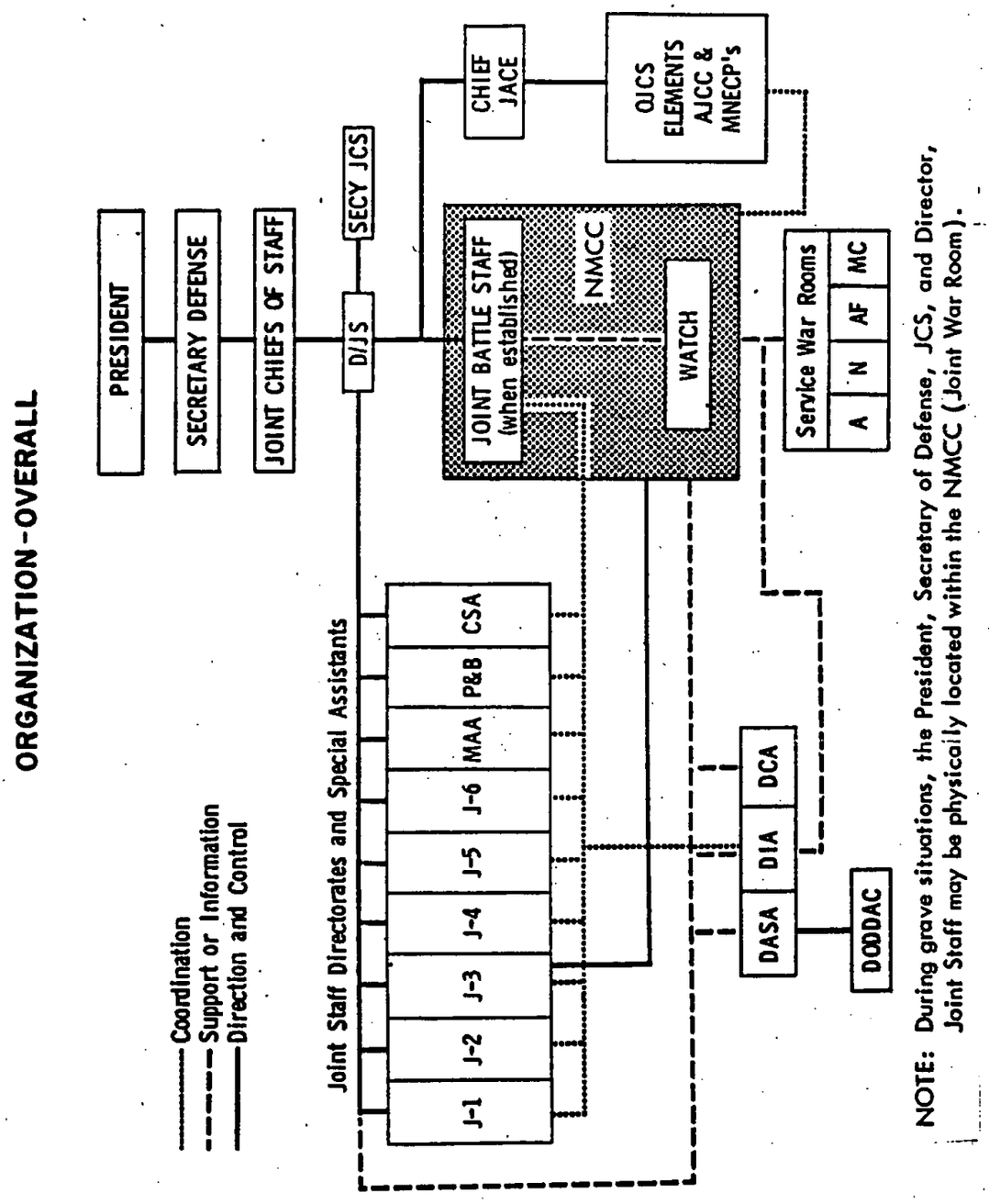
ORGANIZATION-OVERALL
PRESIDENT
SECRETARY DEFENSE
JOINT CHIEFS OF STAFF
SECY JCS
D/JS
CHIEF JACE
OJCS ELEMENTS AJCC & MNECP's
JOINT BATTLE STAFF (when established)
NMCC
WATCH
Service War Rooms
A
N
AF
MC
Joint Staff Directorates and Special Assistants
J-1
J-2
J-3
J-4
J-5
J-6
MAA
P&B
CSA
DASA
DIA
DCA
DODDAC
Coordination
Support or Information
Direction and Control
NOTE: During grave situations, the President, Secretary of Defense, JCS, and Director, Joint Staff may be physically located within the NMCC (Joint War Room).

TOP SECRET

the numbers of personnel involved, and in the nature and scope of OJCS involvement. Accordingly, "these variables compel the OJCS in supporting the JCS to gear its operations to flexible rather than fixed procedures in order to handle and respond effectively to the broad range of situations with which it may be confronted."[1/]

13. [redacted]

[redacted]

1/ COOP-OJCS, op. cit., Part I, "Operations at the Pentagon."
2/ These statements are descriptive of the Watch at the time of the Cuban crisis. The organization and functions of the Watch have recently been changed to permit initiation of action on particular emergency or critical matters.

TOP SECRET

TOP SECRET

d. [redacted]

[redacted] 5/

1/ The Decision Group consists of "key individuals who must be available during periods of increased tension to render immediate and substantive advice to the Decision Makers." The Augmentation Group consists of a "category of individuals, representing staff elements, who will broaden and deepen the capabilities of the respective Alert Cadre Elements (located in the Pentagon, and the AJCC, the NECPA, and the NEACP) in support of the Decision Group." See COOP-OJCS, ibid.

2/ Ibid.

3/ Ibid., Part III, "Post Relocation," Chapter 1, "Operations at the Alternate Joint Communications Center."

14. [redacted]

[redacted]

15. The forms of organization and procedure contained in the COOP-OJCS had previously been tested in the [redacted] Unfortunately, the Cuban crisis intervened before many of the problems revealed by this exercise could be resolved by corrective staff action. The post-exercise critique for commanders, which was intended to isolate critical problem areas and to recommend corrective measures, was cancelled because of Cuban developments. Written critique agenda items on HIGH HEELS II were not reproduced until 11 December 1962, nearly one month after the Cuban Battle Staff had been dissolved and five days after the discontinuance of the augmented Cuban Watch. The consolidated critique document which was reproduced on that date for Joint Staff evaluation contains 207 items submitted by participating command agencies and Joint Staff Directorates.

1/ J3M 1258-62, for Director, Joint Staff from Director, J-3, subj: Relocation of Alert Cadre Group, 22 October 1962, CONFIDENTIAL.

2/ [redacted]

[redacted]

HIGH HEELS II placed major emphasis on a general war situation and many of the critique items, therefore, deal with nuclear operations. It is useful to note, however, that twenty or more of the items pertain to and suggest changes in Joint Battle Staff functions, the handling of message traffic, the coordination of Joint Staff activities, the conduct of briefings, status of forces reporting, situation reports, and other topics that had direct relevance to emergency operations in the Cuban crisis.[1]

16. Although the Cuban crisis broke before the critique of HIGH HEELS II could be implemented by organizational and procedural changes, it is nevertheless true that a large number of J-3 personnel and the higher echelons of command had been thoroughly briefed on, and had exercised the basic procedures contained in the COOP-OJCS. As a result of the HIGH HEELS II experience, therefore, the personnel of the OJCS were perhaps as well prepared for operations in a crisis as could be expected. Unfortunately, most of the Battle Staff members picked for the Cuban crisis had not had previous Battle Staff experience in HIGH HEELS II. Joint Battle Staff experience in this exercise apparently was not a determining or major factor in the selection of Cuban Battle Staff members.[2] According to several observers, experience on the HIGH HEELS II Battle Staff proved to be of considerable value in enhancing the effectiveness of Cuban Battle Staff personnel, especially during the early, critical period of operations.[3]

1/ JCSM Working Paper for Action Officers, from D. R. Ward, Colonel, USA, Project Officer, subj: Exercise HIGH HEELS II. Critique Agenda Items (U), 11 December 1962, TOP SECRET.
2/ Interview No. 2, 8 March 1963.
3/ Interview No. 1, 7 March 1963; Interview No. 3, 11 March 1963; Interview No. 4, 12 March 1963.

17. In summary, two weeks before the Cuban crisis began to develop, the concept, procedures, personnel, and facilities of the OJCS had been exercised in a general war context during HIGH HEELS II. A description of how these same concepts, procedures, personnel, and facilities were employed during an actual crisis operation is contained in the following sections of the paper.

INITIAL ACTIVITIES AND AUGMENTATION OF THE WATCH (15-21 OCTOBER)

18. On Sunday, 14 October, high-altitude photo surveillance missions were flown over Cuba.

1/ Robert McNamara, Secretary of Defense, Department of Defense, Special Cuba Briefing, February 6, 1963.

2/ Enclosure "A", Chapter I, "Precrisis Military Contingency Planning".

TOP SECRET

[ ] The Chief, CAC, was informed of the President's itinerary on Thursday, 18 October, and knew in advance that the President would cancel his scheduled political speech-making trip and would return to Washington to direct Cuban planning and military mobilization.[1] The deployment of NORAD and STRIKE aircraft into the southeastern United States was beginning at this time.[2] On 18 October, CINCLANT was also authorized to release special intelligence planning information for use at the air crew level.[3]

20. Formal augmentation of the normal Watch was begun on Friday, 19 October, following an afternoon briefing by the Director, J-3, for key J-3 personnel assigned to the CAC, the LANT/CARIB Branch, and other J-3 Divisions. (See Appendix B, Figure 1, which shows the organization of J-3 at the time of the Cuban crisis.) At that time, the Director of Operations suggested that the Chief, Current Operations Division, and the JCS/J-3 Duty Officer begin making preparations to shift to Joint Battle Staff operations. This action was based on a staff memorandum developed by the Chief of the Combat Plans Branch.[4]

21. [ ]

[ ]

1/ Interview No. 1, 7 March 1963.
2/ Msg., JCS 6761, 182204Z, October 1962, TOP SECRET.
3/ Msg., JCS 6765, 182356Z, October 1962, TOP SECRET.
4/ Interview No. 6, 1 April 1963.

TOP SECRET

TOP SECRET

[redacted]

22. [redacted]

[redacted]

23. The preparation of the MAL, later called the Master Check List (MCL), soon became too time-consuming for the Quarantine Group, and on Saturday night (20 October), the responsibility for this important activity was reassigned to the General Operations Division. (For a more detailed discussion on the production of MCLs, See Appendix "B", "General Operations Division.")

24. Although the augmented Watch continued throughout most of Sunday, 21 October, the phase-over to Joint Battle Staff operations began on Sunday morning when the Deputy Director, J-3, appointed the Joint Battle Staff Team (JBST) Chiefs and directed one of them to "Get over there and get with it."[4/]

1/ J3M (Unnumbered) for Chairman, JCS, from Director, J-3, Subject: "Experts on Two Plans," 20 October 1962, SECRET.
2/ Although prepared on 20 October, the first MAL was not actually published until 21 October 1962.
3/ OP-00 Memo 00092/62 from Executive, CNO, to Distribution, 21 October 1962, TOP SECRET.
4/ Interview No. 13, April 1963.

The CAC Watch officers began alerting personnel who were scheduled to participate in the Battle Staff Teams. Prior to convening the Battle Staff, the Directors of Joint Staff Directorates had been briefed on the Battle Staff operation and personnel had been assigned to the Battle Staff from each Directorate. On Sunday, arrangements were also made to have State Department and NSA liaison representation on the Battle Staff.[1/]

25. The operation in the CAC on Sunday could be characterized as very busy and somewhat disorganized. The normal JCS/J-3 Duty Watch personnel, augmentation personnel, action officers, and new Battle Staff members from J-3 and the other Directorates, were all "scrounging" for background information, trying to determine their responsibilities, processing message traffic, learning existing operational procedures, and performing a wide variety of other tasks. Administrative files of message traffic, displays, logs, and operational procedures were being improvised as the need arose.

26. Initial disorganization and confusion stemmed from the generally changed mode of operations utilized by the JCS during the Cuban crisis. This changed mode included: a) the withholding of detailed intelligence information and operational plans on Cuba from most of the staff until the period following the President's Cuban speech; b) the establishment of special planning and action groups

1/ J3M (No number) for Director, J-3 from Col. Giraudo, Subject: "NSA Officer on Watch in CAC," 21 October 1962, SECRET; and J3M (No number) for Director, J-3, from Col. Giraudo, Subject: "State Department Personnel on Watch in CAC," 22 October 1962, SECRET.

(the Cuba Planning Group, the Blockade Group, the MCL Group, etc.) outside the structure of the Joint Battle Staff; and c) the breakdown of JCS debriefing procedures established for crisis operations because the JCS were meeting in the Gold Room instead of the NMCC Conference Room. These developments left a major informational void that caused ambiguity and lack of clear guidance in the formulation of JBS activities. In part, however, the initial confusion in the Battle Staff resulted from a lack of documented JBS procedures. Many of the key personnel of the Battle Staff had not had previous JBS experience and were therefore not familiar with established message handling practices, preparation of SITREP's, preparation of briefings, and other essential JBS functions.

27. The JCS/J-3 Duty Officer, and the regular Current Actions Team members spent a major share of their time in attempting to brief Battle Staff Team members in their duties and in trying to achieve coordinated action between the JBS team shifts. At the same time, they performed the "trouble-shooting" role of carrying out actions that are formally assigned to the Battle Staff. One of the regular Watch Operations Officers, for example, was given major responsibility for assembling information for the briefing script used in General Taylor's morning briefing. This briefing script also formed the basis for other operational briefings given by the Battle Staff Team Chiefs.[1/] (For a more detailed description of this process, see Appendix "A", "Briefing and Debriefing.")

28. In summary, the week of 14-21 October was a period of transition from normal operations through augmentation of the CAC Watch to twenty-four-hour Joint Battle Staff operations.

1/ Interview No. 4, 12 March 1963.

The week began with a very limited number of personnel involved in Cuban operations under utmost secrecy. The number was gradually increased through Friday evening. At that time, many of the key staff personnel were briefed by the Director, J-3, and the augmentation of the Watch and preparations for the establishment of a Joint Battle Staff were begun. The weekend was marked by intense round-the-clock activity, ad hoc groups working in comparative isolation, and a general air of confusion, lack of information, and mounting pressure. According to several observers, staff actions did not seem to move as efficiently as had been the case during HIGH HEELS II.

29. The general concept of augmentation of the normal Watch and transition to Joint Battle Staff operations, as specified in the COOP-OJCS, was essentially followed during the build-up phase. The major deficiencies in this process did not arise from basic inadequacies in the concept of operations; rather they resulted from the lack of detailed supporting procedures and the absence of sufficient operational personnel well trained in those procedures.

JOINT BATTLE STAFF OPERATIONS (21 OCTOBER - 12 NOVEMBER)

30. The Joint Battle Staff began operations Sunday morning with the assignment of three Team Chiefs (Deputy Chiefs of the Joint Battle Staff), under the direct supervision of two Joint Battle Staff Chiefs (Duty Generals). Although the titles given to these positions varied, the basic functions of the personnel assigned to them did not. The two Deputy Directors of J-3, and later a third Deputy Director, became "Duty Generals" and Chiefs, Joint Battle Staff. Three senior Colonel/Captain officers became heads of three Battle Staff teams, i.e., Teams A, B, and C, working 12-hour shifts.

31. C

Security Agency[1] also represented an innovation not anticipated in the COOP-OJCS. Although NCO and civilian administrative assistance was provided, the Cuban Battle Staff also did not have an administrative officer specifically assigned to each shift, as specified in the COOP-OJCS.[2]

32. Most of the newly assigned Battle Staff members were relatively untrained for their new assignments except for general background information derived from their normal staff assignments. Existing evidence seems to indicate that no special orientational briefings were given to prepare Battle Staff members for their jobs, although information was provided on request by personnel knowledgable in the current status of operations. Access to such information for a particular JBST member was, however, restricted to those who had the necessary security clearances. Many JBST members did not have such clearance because their normal staff assignments bore little relation to their assigned positions on the JBST.

33. In general, newly assigned Battle Staff members were given initial orientation by asking them to read copies of the Master Action List and the COOP-OJCS documents. They were then informally briefed by Team Chiefs and the JCS/J-3 Duty Officer, and then left to find the necessary background information for their particular needs.

1/ NSA provided two military officers and two Civil Service employees to maintain liaison with the Battle Staff on a 24-hour basis. See J3M (no number) for Director, J-3, from Colonel Giraudo, subj: "NSA Officer on Watch in CAC," 21 October 1962, SECRET.
2/ COOP-OJCS, op. cit.

TOP SECRET

34. In numerous cases, the search for essential background information and instructions for handling a particular JBS function involved a search through several documents for pertinent material. For example, the COOP-OJCS procedural guidance for handling and processing incoming and outgoing messages consists of the following statements: "Message distribution will be in accordance with current Administrative Instructions," and "Outgoing messages, other than Emergency Actions Messages, will be processed in accordance with current Joint Administrative Instructions."[1/] For a Battle Staff member who was unfamiliar with standard message-handling procedures, this guidance would have required the reading of at least four or more separate Joint Administrative Instructions (JAIs), as well as J-3 Instructions (J-3Is) pertaining to message processing.[2/] However, none of these instructions even mention Joint Battle Staff procedures during crises or emergency operations.

35. More detailed guidance was needed to insure that the Battle Staff properly carried out all of its assigned functions. On Wednesday, 24 October, the Director, J-3, sent a memorandum to the Chief, Joint Battle Staff, in which he provided a "check list of recurring items which must be handled on a daily basis."[3/] This list included the following thirteen items (slightly abstracted from the original):

a. Supervise revision of MCL for Cuban operations, deliver to Director, J-3, at 0700, and publish and distribute by 0900.

1/ COOP-OJCS, op. cit.
2/ The following JAIs refer to Incoming Messages: JAI 5712.2C; JAI 5712.4. In addition, the following J3Is are relevant to processing Incoming Messages: J3I 5712.1C; J3I 5712.3, and J3I 5712.4. The following JAIs and J3Is pertain to Outgoing Messages: JAI 5712.1E; JAI 5712.5; J3I 5712.1C; J3I 5712.3.
3/ J3M (No number) from Director, J-3, to Chief, Joint Battle Staff, 24 October 1962, UNCLASSIFIED.

b. Provide for pick-up by Commander Bagley at 0730 a copy of Current Situation Report and script for Chairman's 0800 briefing for delivery to White House Situation Room.

c. Ten-minute briefing for General Taylor at 0800. Provide script.

d. Situation Report to be published.

e. Review and update actions by JCS and MCL.

f. Prepare draft messages.

g. Maintain liaison with Secretariat officers in room adjacent to Gold Room during JCS sessions -- "for the purpose of obtaining timely information on decisions made by the JCS, to include implementing messages therefor."

h. Maintain and update the completed actions chart located in the Gold Room.

i. Brief [redacted] at 1415.

j. Insure Emergency Actions Branch (EAB) notifies [redacted] of DEFCON changes of LANT, PAC, AL, and CONAD.

k. Insure "Ops Immediate" on fast actions only.

l. Insure that displays in the Situation Room contain up-to-date information in a professional manner.

m. Be prepared to send officer to White House at 1600 to update information on Cuban operations. Contact through Chairman's office.

36. On the following day (Thursday, 25 October), an additional memorandum, prepared by CAC personnel, subject: "Joint Battle Staff SOPs", was addressed to the Battle Staff Teams. Its purpose was "to establish certain basic SOPs and clarify responsibilities in specific areas within the JBST."[1/] It defined the responsibilities of the Deputy

1/ J3M 1282-62, 25 October 1962, UNCLASSIFIED.

TOP SECRET

Battle Staff Team Chief, the Operations Coordinator, the J-3 Representative, and all other team members who were supporting JCS agencies in the NMCC. It then proceeded to outline detailed procedures and time schedules for the preparation of SITREPs, briefings, and Situation Displays. It should be noted that the position of the Operations Coordinator on the JBST had not been anticipated in the COOP-OJCS.

37. These and other procedural memoranda continued to be formulated throughout the life of the Cuban Battle Staff. As late as 9 November, three days before the JBS was disbanded, a memorandum to the JBS established procedures for responding quickly to requests for information by subjects, and directed that subject files of incoming and outgoing messages be maintained by the JBS.[1/]

38. Many details of JBS procedures could not, of course, be anticipated in advance of a particular crisis event. Specific applications will always dictate the necessity for special procedural directives, such as those found in the "Cuba Watch SOPs." Some of the procedural guidance developed during the Cuban crisis, however, reflected the fact that the Battle Staff teams did not have a common understanding of the procedures required to fulfill some of the basic JBS functions. (For a more detailed description of JBS procedures, see Appendix "A".)

39. Battle Staff operations improved steadily throughout the first week. By the end of the first week in November, when a change-over to a new set of Team Chiefs began, the general pattern of activity had become relatively standardized and routinized.[2/]

1/ J3M 1391-62, 9 November 1962, UNCLASSIFIED.
2/ Interview No. 7, 1 April 1963.

40. C

1/ J3M 1258-62, for Director, Joint Staff from Director J-3, 22 October 1962, CONFIDENTIAL.

~~TOP SECRET~~

42. C

3

~~TOP SECRET~~

TOP SECRET

1/ JCS 1968/126, "Joint Chiefs of Staff Emergency Actions Procedures (EAP)," 18 July 1962, TOP SECRET.
2/ Message JCS 6807, CJCS Exclusive to all CINCs and Services, 201214Z, October 1962, TOP SECRET.
3/ Message JCS 6830, CJCS Exclusive to all CINCs and Services, 211814Z, October 1962, TOP SECRET.

1/ Message JCS 6864, DJS for JCS to all CINCs, 221809Z, October 1962, TOP SECRET.

TOP SECRET

46. Other procedural problems involved administrative support procedures within J-3; finding detailed information quickly in order to answer questions asked both by higher authority and by other parts of the CJCS; and Joint Staff debriefing of JCS decisions.

47. The normal J-3 peacetime administrative procedures for processing JCS papers were disrupted during the first week or more of the crisis. This was particularly true at the Directorate level, where the sudden surge of paper work requiring immediate action created serious communication and work overload problems. Especially during the first few days, J-3 memoranda were being processed so rapidly that the Directorate personnel found it impossible to attach and record the usual numerical identification. The large number of unnumbered memoranda cited in the footnote references of the present paper illustrate this break in the normal J-3 administrative routine. Similar problems were encountered in preparing action papers and other correspondence for submission to the Director, Joint Staff, and the JCS. Administrative problems were compounded by the shortage of administrative support personnel and by the lack of adequate space, equipment, and physical facilities for processing the large volume of paper work. Many of these problems were temporarily solved by improvisation during the crisis.[2] The more basic and

1/ For a discussion of some of the international political complications resulting from the alerting of U.S. forces and the increase in readiness to DEFCON-3, see Enclosure "A", Chapter III, "Policy Coordination: Overseas Unified Commands and Allied Powers."

2/ Interview No. 2, 8 March 1963.

continuing problem of developing administrative procedures that are closely geared to future emergency operations still remains, however, and this problem requires further critical examination and necessary remedial action. Efficient Joint Staff support of JCS emergency operations is highly dependent on efficient administrative support.

48. Procedural problems arose in fulfilling the requests for detailed information that emanated from the White House and the Office of the Secretary of Defense during the crisis. The problems are highlighted by an unnumbered memo from the Chairman, JCS, to the Director, Joint Staff, on 24 October,[1/] subject: "Passing Information to the White House, Secretary of Defense, and Deputy Secretary of Defense." The memo states that it is essential to increase information that is passed to the White House, Secretary of Defense and Deputy Secretary of Defense, and it directs that steps be taken to insure that important incoming and outgoing messages are forwarded expeditiously, that a Joint Staff officer be assigned to effect liaison with the White House Situation Room in order to keep it "completely up-to-date," and to "effect a prompt response to requests for information from these agencies."

1/ CM 51-62, for the Director, Joint Staff from Chairman, JCS, 24 October 1962, (No Classification).

TOP SECRET

49. An arrangement for liaison with the White House was established immediately. The Chief, Operations Support Division, was assigned this responsibility. This liaison arrangement apparently alleviated but did not wholly solve the problem. As late as 9 November, the Deputy Director, J-3, directed the Joint Battle Staff, and the Chiefs of the Current Operations and Operations Plans Divisions to establish procedures for the JBST to respond quickly to requests for information by subject.[1/] This was to be accomplished by a system of subject files of incoming and outgoing messages with inputs from the Current Operations Division, the Operations Plans Division, and the JBST representatives from other Directorates.

50. In responding to requests for information, Joint Battle Staff personnel would frequently turn to the Status of Forces Branch for current information on status of forces and other data. Information was usually required immediately and in a variety of formats. As a result, the Status of Forces Branch was overwhelmed by requests for information which greatly exceeded their original terms of reference and their capacity to respond. (For a more detailed discussion of this problem, see Appendix "B", "The Status of Forces Branch.")

51. A final procedural problem arose because the normal, peacetime procedures for debriefing JCS meetings were not utilized during the crisis. These debriefing sessions provide the normal, established mechanism for informing the Joint Staff of JCS decisions and actions. The abandonment of the usual debriefing mechanism may be attributed to three special,

1/ J3M-1391-62, Battle Staff Procedures, 9 November 1962. (No Classification)

interrelated conditions surrounding JCS activities in this event: (1) the high level, tight security control of U.S. policy intentions and of Cuban intelligence information that was exercised during the early phases of the crisis; (2) the decision of the JCS to continue to meet in the Gold Room, instead of utilizing the operational facilities of the Joint War Room; (3) the long, continuous, daily meetings of the JCS, which placed a heavy burden of work on the Director, Joint Staff, the Secretary, JCS, and other OJCS officials, and thereby prevented them from having sufficient time to conduct debriefings. The absence of well-defined substitute procedures for disseminating information on JCS decisions under such conditions proved to be a serious handicap for the Joint Battle Staff and other Joint Staff personnel who were intimately involved in expediting and coordinating JCS actions. (This problem is discussed in greater detail in Appendix "A", "Briefing and Debriefing.")

52. In summary, the period of 21 October to 12 November saw the formation of the Joint Battle Staff, the acceleration of operational staff action during the critical week of 22-28 October, the political resolution of the crisis, and the gradual decline of operational staff action associated with the Cuban crisis. Although the concept of operations outlined in the COOP-OJCS was followed in principle, many problems were encountered by J-3, in general, and by the Joint Battle Staff, in particular, because existing documents did not provide a consolidated source of detailed, specific, procedures to guide personnel in the performance of their emergency duties. Many Battle Staff members had not had training for their jobs in previous command exercises and, in the absence of readily available, detailed procedural guidance, they could not

quickly, and readily familiarize themselves with their new assignments. There were no systematic background briefings planned and none was given to them. Displays, file systems, and relevant data bases were not prepared in advance. These and other preparatory activities consumed a large amount of the time and energy of operations personnel during the most critical period of the Cuban crisis -- a period in which JCS required rapid and efficient support for possible sudden, large-scale military operations. Despite these initial handicaps, however, most of the serious procedural problems were overcome during the first four days of the crisis by effective improvisation and the development of new procedural guidance that was required by the immediate demands of the situation.

THE PHASE-OUT PERIOD (12 NOVEMBER - 6 DECEMBER)

53. The Joint Battle Staff was disbanded on 12 November and replaced with an augmented Watch. The Cuban Watch was composed of the normal Current Actions Center Watch augmented by two officers and three enlisted men from J-3, and one officer designated as contact officer for Cuban affairs on 24-hour duty in J-4, J-5, J-6, and SACSA.[1/] The three J-3 Executive Officers at this time had their status changed from JBS Chiefs to General Watch Officers for the Director, Joint Staff. The augmented Cuban Watch continued the basic functions of the Battle Staff, including the preparation of written briefings, the SITREP, and the inputs to the MCL. When the MCL was discontinued on 21 November, the augmented Watch also took over responsibility for publication of a revised form

1/ DJSM 1442-62, 12 November 1962, CONFIDENTIAL.

of check list for Cuban operations.[1] On the same date the Quarantine Watch and the General Officer Watch for the Director, Joint Staff, were discontinued. However, the requirement for the J-3 Duty Generals to serve on a 24-hour basis was continued. This requirement was relaxed on 30 November to eliminate the need for a Duty General to remain in the building at all times.[2] November 30 also marked the discontinuance of the morning briefing report to General Taylor.

54. The augmented Cuban Watch was terminated with the discontinuance of Operation SCABBARDS[3] at 0600Z on 6 December 1962, and the Current Actions Center then returned to its normal state of organization and functioning.

55. During this period, a political settlement had been reached, forces were gradually being returned to home bases, and message traffic requiring staff action had sharply declined. Procedures developed during the crisis had become routine. In general, augmented Watch duty had become increasingly slow.

SUMMARY OBSERVATIONS

56. This section contains the general observations and conclusions of the study. They stem from a comparison of the procedures actually employed during the Cuban crisis with those procedures specified in pre-existing OJCS documents. The evidence supporting these observations, together with the more detailed findings of the study, are presented in the foregoing "Discussion" section and in the Appendices.

1/ J3M (No number), from Director, J-3, for Deputy Director, J-3, Division Chiefs, JBST Chiefs, Subject: "Continuing Requirements for Duty General and JBS," 21 November 1962, (UNCLASSIFIED).
2/ J3M (No number) for the Record, from Deputy Director, J-3, Subject: "Cuba Watch, Relaxation of Requirements for," 30 November 1962, (NO CLASSIFICATION).
3/ Note: SCABBARDS was the code name referring to Cuban contingency operations; for a discussion of the term SCABBARDS and its usage, see Enclosure A of this study.

THE CONCEPT OF OPERATIONS

57. The general concept of normal Watch augmentation and the transition to Joint Battle Staff operations, as specified in the COOP-OJCS, was essentially followed during the Cuban crisis. However, Joint Battle Staff operations were hampered by a number of procedural problems during the early critical period of the crisis. These problems arose in part because of the lack of detailed procedures supporting that concept of operations and because many JBS members lacked the necessary training and experience with Joint Battle Staff functions. Most of the Battle Staff members were relatively untrained for their new assignments, except for general background information obtained in their normal staff assignments. Existing evidence indicates that no special briefings were planned or were given to prepare Battle Staff members before or immediately after they were assigned. (See "Discussion".)

ADMINISTRATIVE OPERATIONS

58. Many normal J-3 peacetime administrative procedures failed during the crisis. Because of the press of time and the volume of action papers to be prepared for JCS consideration, the peacetime procedural system for submission of papers to JCS was rarely used by J-3 action officers. Even the "short-form" Green method and other methods of expediting the processing of JCS papers proved to be too unwieldy from an operational point of view. The lack of space, shortages of administrative personnel, and the absence of procedures clearly adapted to crisis operations all contributed to operational inefficiency during the first few days of the crisis. Many of these procedural problems were alleviated during the crisis, but their existence during the critical phase of the crisis suggests the need to examine the close

interaction between administrative and operational procedures employed during emergency situations, and to develop new emergency administrative operational procedures which can be exercised in conjunction with other emergency operational procedures.

59. The operation of a Battle Staff, the development and use of the MCL, and the J-3 methods used to submit action items for JCS consideration in large part replaced peacetime administrative procedures of the Joint Secretariat and J-3. The JBS assigned actions to the Directorates, maintained follow-up monitoring of the status of actions, developed agenda items for the MCL, and maintained comprehensive message files for reference. These activities have been clearly defined in JAIs and other procedural documentation as standard Joint Secretariat responsibilities for peacetime operations. However, there are no provisions in the JAIs for transition from peacetime administrati procedures to administrative support for operational procedures during crises. As a result, a transition was not made and both systems operated simultaneously during the crisis. (See "Discussion", paragraphs 47-52; Appendix A, paragraph 32-40 and 50-51; and Appendix B, paragraphs 59-63.)

BRIEFINGS

60. The large amount of time spent by the JBS Chiefs and Team Chiefs in preparing and presenting briefings necessarily interfered with their primary functions of planning, directing, and coordinating the activities of the Battle Staff team members and J-3 action officers. Moreover, the documented procedural guidance for the conduct of briefings proved to be inadequate to insure efficient, high quality briefing preparation and presentation by the JBS. At first, Battle Staff personnel did not have detailed knowledge of the input sources of information for briefings and were relatively

inexperienced in the techniques of briefing preparation. The JBS had to rely heavily on experienced CAC briefers for the assembly of information and the preparation of briefing scripts. In general, therefore, the Cuban experience suggests the need for reducing the number of special or ad hoc briefings, for shifting the responsibility for briefing preparation and presentation to officers who do not have primary responsibilities in the direction of the JBS, and for utilizing briefing officers who have had specialized training and experience in the conduct of operational briefings. (See Appendix "A", "Briefing and Debriefing.")

DEBRIEFINGS

61. Normal JCS debriefing procedures were not used throughout the period of Joint Battle Staff operations from 21 October through 12 November. The failure to use the normal debriefing mechanism derived from several special conditions surrounding the Cuban crisis. Cuban intelligence information and U.S. intentions during the early phases of the crisis had to be tightly controlled. The Joint Chiefs of Staff were in almost continuous session for many days and, as a result, key personnel normally involved in the debriefing procedure were preoccupied with the press of other work. Even had they been available, the requirement to maintain tight security control over U.S. intentions would have precluded extensive debriefing of the Joint Staff.

62. The failure to utilize the usual system for debriefing JCS meetings created numerous problems. It made it difficult for the JBS to ascertain the briefing needs of the JCS and to tailor their information collection, analysis, and presentation activities to these needs. It created an informational

vacuum which made it difficult for the JBS to plan advance actions. It produced unnecessary confusion, duplication of effort, and lack of coordination in the performance of JBS and Joint Staff activities. In general, the failure to provide an established information feedback mechanism from JCS to the JBS, seriously hampered the Battle Staff's ability to perform its intended function of expediting and coordinating JCS actions. (See Appendix "A", "Briefing and Debriefing.")

THE MASTER CHECK LIST

63. The Master Check List (MCL) was an ad hoc innovation developed in response to a request by the Chairman, JCS, that J-3 maintain a continuing record and history of all actions in the Cuban crisis. Despite this initial limited purpose, however, it quickly became recognized by the Joint Staff as the fastest and most reliable method of placing urgent operational matters on the JCS agenda and also as the most authoritative single source of information on topics that were being considered by JCS.

64. The MCL was submitted to the JCS each morning. Attached to it were appropriate action papers which contained a discussion of the problem, recommendations, and implementing draft messages. This procedure had the effect of allowing action officers to submit their papers for JCS decision in a matter of hours, instead of days. Action papers were submitted at the JCS meetings as Director, Joint Staff Memoranda (DJSMs). This process short-cut the elaborate coordination process required during peacetime operations. As a result, the Joint Staff was able to operate more like a true military staff than is the case under normal conditions. (See Appendix "B", General Operations Division.")

CONTINGENCY PLAN IMPLEMENTATION PROCEDURES

65. [redacted]

[redacted]

MESSAGE-PROCESSING PROCEDURES

66. A review of message-processing procedures listed in JAIs and other sources suggests several shortcomings when reviewed in the light of the augmented Watch and Battle Staff operations in the crisis.

a. None of the documented procedures relate to Battle Staff operations, crisis operations, or wartime operations. Documented procedures are essentially peacetime procedures, with provision for special short-cuts for an occasional message requiring prompt action. Despite this the COOP-OJCS specifically instructs Battle Staff personnel to follow standard message processing procedures.

b. There is no centralized source of message-processing procedures available to serve as guides to staff personnel assigned to Joint Battle Staffs.[1/]

c. The elaborately documented peacetime system for message reproduction, distribution, control, and clearance, as defined in JAIs and J-3Is, is simply too slow, complex, and cumbersome to meet operational requirements for the rapid processing of a high volume of action messages associated with crisis operations. The more streamlined and operationally oriented JBS procedures replaced many of these peacetime, administratively oriented procedures. (See Appendix A, "Processing Message Traffic.")

ACTION OFFICERS

67. The development of action papers is probably the most crucial part of the whole process by which the Joint Staff provides support for JCS command decisions. All action officers involved in the Cuban crisis were subjected to very heavy and demanding workloads, but the pressures were

1/ For a comprehensive description of the organization, mission, facilities, and operations of the Joint Chiefs of Staff Message Center, see WSEG paper, "Joint Chiefs of Staff Message Center Operations", 10 April 1962, SECRET, Limited Distribution.

particularly concentrated on a few key officers who were most knowledgeable and had the confidence of the command. Despite the very capable performance shown by J-3 action officers during the crisis, it is questionable if the J-3 organization could have provided adequate staff support for considerably expanded emergency operations.

68. One of the greatest assets of experienced action officers is their detailed knowledge of the appropriate sources and channels of information and of the techniques and procedures for preparing and processing action papers. They have appropriate files readily available; they know whom to call, where to go for particular types of information, and with whom their actions must be coordinated; and they are familiar with the types of format and levels of detail required by the JCS in the submission of action papers. Knowledge of this type, together with the possession of detailed information on particular geographic areas or subject matters, represents a relatively rare combination of skills which is found in only a few key individuals who have had relatively continuous, specialized training and experience. The fact that a number of J-3 action officers had this combination of procedural knowledge and subject matter competence probably made the difference between an effective J-3 operation and an ineffective one during the Cuban crisis. (See Appendix "A", "JBST and Action Officer Procedures.")

TOP SECRET

THE SITREP

69. The preparation of the daily and supplemental SITREPs was one of the most time-consuming and difficult tasks assigned to the Joint Battle Staff. The difficulties encountered in its preparation stemmed from several sources: (a) the format for presentation of SITREP data was not known or fully understood by many of the members of the Battle Staff; (b) the lack of feedback of information from the JCS made it difficult for the JBS to determine what information to include in the SITREP; (c) the process of collating, organizing, and analyzing data relevant to the emerging Cuban situation was complicated by the sheer volume and complexity of input data arriving from CINCs, Commands, and Service War Rooms; (d) initial input data from the CINCs proved to be inadequate to the needs for JBS SITREP production; and (e) preparation of the SITREP was hampered by the lack of a centralized source of information on the current deployment and status of forces.

70. Present procedural guidance for the preparation of SITREPs is limited to the assignment of responsibility for its production and a brief description and topical outline of its content. Based on the Cuban Battle Staff experience, this guidance is not sufficient to insure the production of Situation Reports which fulfill the basic purposes of this report. Additional procedural guidance was needed in providing the basic criteria of relevance for the inclusion and exclusion of information to be utilized in the report, and in identifying and centralizing the input sources of information. (See Appendix "A", "Situation Reports (SITREPs).")

INFORMATION SUPPORT OPERATIONS

71. The Cuban crisis emphasized the need for a highly detailed data base for Status of Forces information, a capability for rapid retrieval of that information in many forms, and the need for more clearly defined requirements for general informational support. In responding to requests for information, Joint Battle Staff personnel would frequently turn to the Status of Forces Branch for current information on status of forces and other force data. Information was usually required "right now" and in a variety of formats. As a result, the Status of Forces Branch was overwhelmed by requests for information which far exceeded their original terms of reference and their capacity to respond. In general, it was found that Joint Operational Reporting System (JOPREP) reports containing Status of Forces information, i.e., REDAT, REDNON, REDRAD,[1/] were not as useful as the SITREPs submitted by the unified and specified commands. They were not timely and did not contain the detail required by various users of this information. In effect, the JOPREP for Status Reports was no responsive to Joint Staff requirements for implementing contingenc plans.

72. Although lack of modern graphics and display production material, adequate map bases, and storage space was a problem for support operations, major problems stemmed from changing requirements for displays and graphics and the lack of uniform guidance. Lack of uniform guidance stemmed, in part, from the fact that the Branch had to take direction from two different masters. Branch personnel tried to be responsive to both the operations personnel they served, namely, the JBST and JCS/J-3 Duty Officer Watch, and to the

1/ Operational Ready Reports, Atomic, Non Atomic and NORAD.

Chief of the Operations Support Division. (See Appendix "B", "The Status of Forces Branch.")

RELOCATION OF THE ALERT CADRE

73. [redacted]

[redacted]

APPENDIX A

JOINT BATTLE STAFF TEAM PROCEDURES

TABLE OF CONTENTS

	Page No.
BRIEFING AND DEBRIEFING	43
INTRODUCTION	43
BRIEFINGS	43
DEBRIEFING	47
DOCUMENTED PROCEDURES	49
DISCUSSION	50
SITUATION REPORTS (SITREPS)	53
INTRODUCTION	53
JOINT BATTLE STAFF PROCEDURES	54
DOCUMENTED PROCEDURES	60
DISCUSSION	60
PROCESSING MESSAGE TRAFFIC	61
INTRODUCTION	61
JBST PROCEDURES	62
DOCUMENTED PROCEDURES	66
DISCUSSION	68
COORDINATION OF STAFF ACTION	69
INTRODUCTION	69
JBST AND ACTION OFFICER PROCEDURES	69
DOCUMENTED PROCEDURES	73
DISCUSSION	74

TOP SECRET

APPENDIX "A"

JOINT BATTLE STAFF TEAM PROCEDURES

BRIEFING AND DEBRIEFING

INTRODUCTION

1. Briefing and debriefing within OJCS, under normal conditions of functioning, tend to form a complete feedback communication loop. Briefings provide JCS with data essential for planning, decisions, and action directives. Debriefings of JCS meetings, in turn, provide the Joint Staff with the information and guidance required for the implementation of decisions and directives. During the Cuban crisis, the normal system of briefing and debriefing underwent various changes, both planned and unplanned. The present section discusses the nature of these changes and their consequences for Joint Battle Staff (JBS) functioning during the crisis. Specifically, it describes the role of the JCS in the conduct of briefings, examines the degree to which the Battle Staff briefing procedures used during the crisis conformed with preexisting procedural documentation and practice, and notes some problems that developed in relation to JBS briefings and JCS debriefing procedures.

BRIEFINGS

2. The conduct of daily operational briefings is an established function of the Current Actions Branch, Current Operations Division, J-3. The scheduled daily briefings in the Current Actions Center (CAC) include an 0830 briefing for the Directors of the Joint Staff and a briefing at 0930 for the J-3 Staff and other Joint Staff personnel. These briefings, and various special or "on call" briefings, are normally prepared and presented by one of the five Current Action Center Watch operations officers who have been specially trained in briefing procedures and techniques.

3. With the phase-in of the Cuban Battle Staff on 21 October, and until the JBS was disbanded on 12 November 1962, the basic responsibility for both scheduled and "on call" briefings shifted from the CAC Staff to the Joint Battle Staff. This shift conformed with the procedural guidance contained in the JCS document, CONTINUITY OF OPERATIONS OF THE ORGANIZATION OF THE JOINT CHIEFS OF STAFF, (COOP-OJCS)[1], which directs that operational briefings will be coordinated by the Chief, Joint Battle Staff, when established. This document also specifies that scheduled briefings will be conducted daily, as prescribed by the Director, Joint Staff, who also prescribes other briefings on call and authorizes the briefing attendees.[2]

4. The Joint Battle Staff took over the responsibility for the routinely scheduled 0830 briefing for the Joint Staff Directors. The briefing of other Joint Staff personnel, normally scheduled for 0930, was combined with the JBS relief-of-watch briefing at 0900. Another change-of-watch briefing was given at 2100 daily.[3] These briefings were presented by the Joint Battle Staff Team (JBST) Chiefs and were continued throughout the period from 22 October until 12 November, when the Battle Staff was disbanded and the Current Actions Center returned to an augmented Cuban Watch.[4]

5. On Monday, 22 October, the Chairman, JCS, requested a special ten-minute briefing each morning on Cuban intelligence and operations.[5] These briefings were scheduled for 0800 daily, and were presented by one of the three J-3 Deputy Directors, who were serving as Battle Staff Chiefs (Duty Generals). The oral briefings for the Chairman were begun on 23 October and were

1/ JCS - CONTINUITY OF OPERATIONS OF THE ORGANIZATION OF THE JOINT CHIEFS OF STAFF, Part I, "Operations at the Pentagon," pp. 18-19, 27 August 1962, SECRET.
2/ Ibid.
3/ J3M-1282-62, 25 October 1962, TOP SECRET.
4/ DJSM-1442-62, 12 November 1962, CONFIDENTIAL.
5/ Interview No. 4, 12 March 1963.

TOP SECRET

also attended by the Director, Joint Staff, and the Director, J-3. They were continued until 10 November, when the Chairman, JCS, requested that the oral briefing be discontinued, but that a written briefing script, using the same format as previously, be delivered to him by 0830 daily.[1/] These written briefing reports were later prepared by the augmented Cuban Watch and were finally discontinued on 30 November 1962.[2/] Script copies of each Chairman's briefing were distributed to him, the White House Situation Room (via DIA courier), the U.S. Representative to NATO, the Director, Joint Staff, the Director, J-3, the Joint Battle Staff Chief, to J-5, and to the J-3/JCS Duty Officers.[3/]

6. In addition to the Chairman's briefing, the Joint Battle Staff was quickly charged with responsibility for other special briefings. On 24 October, the Director of Operations was directed to provide a daily 1500 briefing on the Cuban situation to [ ] Washington.[4/] On the same date (24 October), J-3 input was requested for a briefing for the NATO Standing Group at 1500 hours,[5/] and on the following day, the Director, J-3, was directed to provide daily briefings for this Group.[6/]

1/ J3M (no number) from Deputy Director, J-3, to Chief, JBST, subj: "Briefing for General Taylor," 10 November 1962 (no classification); and J3M (no number) from Deputy Director, J-3, to Chief, JBST, same subject, 12 November 1962, (no classification).

2/ J3M for the Record from H.B. Stark, Capt, USN, Watch Officer, subj: "Morning Briefing Report to General Taylor," 30 November 1962, (no classification).

3/ J3M (no number), from Deputy Director, J-3 to JBST Chiefs, subj: "Briefing for General Taylor," 10 November 1962, (no classification).

4/ J3M (no number), 24 October 1962, TOP SECRET. Although this memorandum indicates that the briefing for [ ] was to be conducted at 1500 hours, this time apparently was quickly changed to 1415 hours. A J3M from Director, J-3, to Chief, Joint Battle Staff, subj: "Joint Battle Staff Check List," 24 October 1962, notes the time of the briefings as 1415 hours. On 2 November, [ ] requested that the briefing "revert to the normal and be done at 1500 today if possible." Memorandum from unidentified officer to Deputy Director, J-3, 2 November 1962, 1145.

5/ J3M for the Record, from Military Secretary, J-3, subj: Briefing for Standing Group NATO," 24 October 1962.

6/ J-3 MCL No. 9, 26 October 1962, 0600 EDT, TOP SECRET.

7. In summary form, the Joint Battle Staff was responsible for the following daily schedule of formally established briefings:

Time	Attendees	Briefing Officer or Coordinator
0800	Chairman, JCS Director, JS Director, J-3	Battle Staff Chief (B/Gen Clay)
0830	Joint Staff Directors	Battle Staff Team Chief
0900	Joint Staff Personnel & Incoming JBST	Battle Staff Team Chief
1415		Battle Staff Chief (1st Day) Battle Staff Team Chief (Later)
1500	NATO Standing Group	Battle Staff Team Chief
2100	Incoming JBST	Battle Staff Team Chief

8. In addition to these formally established briefing sessions, there were numerous informal briefings of visiting military personnel and of personnel from the Office of the Secretary of Defense, the State Department, and other agencies. The formal change-of-watch briefings were also supplemented by face-to-face briefings between the personnel occupying counterpart positions in the outgoing and incoming Battle Staff Teams. For example, the incoming Battle Staff Team Chief usually arrived one-half hour before his Watch began and the outgoing Team Chief remained one-half hour longer than his scheduled time of relief, so that both could discuss actions that had been completed and the follow-up or future actions that were required. Similar personal briefings occurred between the Operations Coordinator, the J-3 representative, and other counterpart personnel on the two teams.[1/]

1/ Interview No. 6, 1 April 1963.

DEBRIEFING

9. The procedure for debriefing JCS, State-JCS, and OPS DEPS meetings, in order to review JCS action on agenda items, is established in JAI 5410.2B, BRIEFING AND DEBRIEFING PROCEDURES FOR JOINT STAFF PERSONNEL, 16 December 1960. This Joint Administrative Instruction provides the following schedule of meetings subsequent to which the Director, Joint Staff, conducts a debriefing and issues necessary instructions to the staff:

a. OPS DEPS Meetings (Tuesday, 1400)

b. JCS Meetings (Wednesday and Friday, 1400)

c. State-JCS Meetings (Friday, 1400)

The specified attendees at these debriefings include the Director of each Joint Staff agency (or his representative), and a member of the Branch responsible for briefing each item.

10. This previously established mechanism for debriefing was not used throughout the period of Joint Battle Staff functioning from 21 October through 12 November for various reasons, including the tightly controlled nature of Cuban intelligence information and U.S. intentions during the early phases of the crisis, the fact that the Joint Chiefs of Staff were in almost continuous session for many days, and the fact that the key personnel normally involved in the debriefing procedure were heavily preoccupied with the press of other work. Even if these personnel were available, the extreme sensitivity and security surrounding U.S. intentions in the crisis, would have precluded extensive debriefings of the Joint Staff.

11. The basic pattern for this changed mode of operations was established a week or more prior to the formation of the Joint Battle Staff, and it involved the establishment of a direct and immediate relationship between the JCS and a few selected action officers comprising the Cuban Planning Group. This Group, and a

few additional individuals who were subsequently informed, retained tight security control of information on Cuban events and JCS decisions prior to 19 October. On the latter date, additional key members of the Joint Staff were briefed on the nature of the Cuban missile threat and the anticipated Executive Department and JCS plans.

12. The changed mode of operations established during this early period tended to persist, in varying degree, throughout the crisis in the form of a more direct relation between JCS and the action officers assigned particular responsibilities for the various phases of Cuban operations. Especially during the first week of JBS operation, there was a major informational hiatus between the Battle Staff and the JCS decision-making and implementation process. A large proportion of the JCS decisions for action or deferral of action during this early phase came to the attention of the Joint Battle Staff only indirectly and after a considerable time delay. Only a small proportion of the JCS CUT-messages were drafted in the JBS,[1/] and, in numerous cases, the JBS members were unaware that a given JCS decision had been made until they received a delayed informational copy of the message via the Emergency Actions Team.[2/] In some cases, queries on a given JCS message were directed to the JBS from lower echelons of command before the JBS had received copies of the message that stimulated the query. In a few cases, two messages on the same subject were dispatched to lower echelons because the JBS did not have information that a previous message on the same subject had been sent.[3/]

13. The informational vacuum thus created for the JBS led to efforts to establish new channels of communication between the

1/ Interview No. 4, 12 March 1963.
2/ Interview No. 1, 7 March 1963.
3/ Interview No. 2, 8 March 1963.

TOP SECRET

Battle Staff and the JCS Gold Room, where the Joint Chiefs were meeting. These channels were never completely formalized and routinized, but by about 1 November they were apparently sufficiently well developed and understood that they provided a reasonably adequate feedback system for JBS operations. The techniques used for securing information directly from JCS appear to have varied somewhat over time. Initially, arrangements were made for the Joint Secretariat officers stationed in the anteroom of the Gold Room to telephone the J-3 Battle Staff Chief (General Duty Officer) to inform him that they had information for the Battle Staff. A Battle Staff member would then be sent to the anteroom to secure the information.[1/] According to some informants,[2/] this system did not prove wholly satisfactory, and subsequent arrangements included having the action officers come directly from the JCS meeting to report to the JBS, and sending the JBS Operations Coordinator or J-3 representative to the Secretary or Deputy Secretary, JCS, to determine what had happened in the JCS meetings.[3/]

DOCUMENTED PROCEDURES

14. The following OJCS documents pertaining to briefing and debriefing procedures were in effect at the time of the Cuban crisis:

a. JCS, Continuity of Operations of the Organization of the Joint Chief of Staff (COOP-OJCS), 27 August 1962, SECRET.

b. JAI 5410.2B, Briefing and Debriefing Procedures for Joint Staff Personnel, 16 December 1960, UNCLASSIFIED.

c. J-3 Instruction 5410.1A, State-JCS/Joint Staff Meeting Agendas, 2 July 1962, UNCLASSIFIED.

1/ Interview No. 2, 8 March 1963.
2/ Interview No. 3, 11 March 1963; Interview No. 4, 12 March 1963.
3/ Interview No. 6, 1 April 1963.

d. J-3 Instruction 5410.3E, Procedures for Briefing Sheets, Oral Briefings and Debriefings, 17 August 1961, UNCLASSIFIED.

e. J-3 Instruction 3000.5, Weekly Operational Briefing for the Director for Operations, 26 March 1962, UNCLASSIFIED.

15. The most pertinent of these documents for Joint Battle Staff briefings is the COOP-OJCS, which provides a brief outline of the format and content of operational briefings.[1/] None of the above documents provides an explicit statement or mechanism for Joint Battle Staff debriefing of JCS meetings. It should be noted that the COOP-OJCS provides for Secretary, JCS, representation on the JBS;[2/] there was, however, no such Secretariat representative assigned to the JBS.

DISCUSSION

16. A comparison of the actual operations of the JBS during the Cuban crisis with the procedural guidance available in pre-existing OJCS documents indicates a number of discrepancies and problem areas:

a. Although the responsibility and general format of operational briefings is well-defined in the COOP-OJCS document, the process of collecting and coordinating the input sources of information for operational briefings was not specified or clearly delineated. Personnel on the JBS who were responsible for briefing preparation and presentation were handicapped by a lack of intimate knowledge of both the internal and external sources and channels of input data and by lack of experience in the techniques of briefing preparation. This problem was solved to some extent by having one of the regular CAC briefers collect the input data and prepare the script for the daily briefings of the Chairman,

1/ See, especially, Section I, paragraph 7c, pp. 18-19.
2/ COOP-OJCS JBS Organizational Chart, Part I, p. 15.

JCS. This script was then utilized for the briefings conducted by the Battle Staff Team Chiefs.[1/] This ad hoc adaptation is, however, a departure from the briefing responsibilities assigned to the Battle Staff in the COOP-OJCS document.

b. The efficient administration of the Battle Staff was hampered by the practice of using the Battle Staff Chiefs (Duty Generals) and Team Chiefs for briefing presentations. The large amount of time required for briefing preparation and presentation not only imposed a personal hardship on the Battle Staff leadership but also necessarily interfered with its primary functions of planning, directing, and coordinating the activities of the Battle Staff team members. This interference with primary directive functions was further aggravated by various special and ad hoc briefings which they were called upon to perform. A number of observers in the OJCS have noted the necessity for reducing the number of scheduled and ad hoc briefings conducted by the Battle Staff and also the desirability of assigning responsibility for briefing presentations to officers who do not have primary responsibilities in the direction and administration of the JBS.[2/]

c. Several of the offices in the Office of the Secretary of Defense which were vitally concerned with Cuban affairs did not consistently send representatives to the regularly scheduled briefings conducted by the Joint Battle Staff in the Current Actions Center. This resulted in the need for conducting additional special briefings for their benefit and an unnecessary increase in the volume of communications between individual OSD offices and the Current Actions Center.[3/]

1/ Interview No. 4, 12 March 1963.
2/ Interview No. 3, 11 March 1963; Interview No. 4, 12 March 1963; Interview No. 5, 13 December 1962.
3/ Interview No. 1, 7 March 1963

TOP SECRET

d. The failure to use the peacetime system of debriefing JCS meetings created numerous problems. It made it difficult for the JBS to ascertain the briefing needs of the JCS and to tailor their information collection, analysis, and presentation activities to these needs. It created an informational vacuum which made it difficult for the JBS to plan advanced actions. It produced unnecessary confusion, duplication of effort, and lack of coordination in the performance of JBS and Joint Staff activities. In summary, the failure to provide an established information feedback mechanism from JCS to the JBS seriously hampered and, in some cases, negated the fulfillment of the Battle Staff's intended function of expediting and coordinating JCS actions.[1/]

e. One of the emergency procedures intended to remedy the problem of keeping the JBS informed of JCS actions is the provision for inclusion of a representative of the Office of the Secretary, JCS, on the Battle Staff. This representation, which is specified in the COOP-OJCS, was not effected during the Cuban crisis. If it had been, it is probable that at least some of the confusion and lack of coordination could have been avoided.

The breakdown of the peacetime debriefing procedures and the failure to effect satisfactory substitute procedures during the crisis suggest the need for a more thorough review of the whole debriefing problem and the development of more realistic and efficient debriefing measures.

1/ JCS, CONTINUITY OF OPERATIONS OF THE JOINT CHIEFS OF STAFF (COOP-OJCS), Part I, Paragraph 2g, 27 August 1962, SECRET.

SITUATION REPORTS (SITREPS)

INTRODUCTION

17. One of the essential functions of the Joint Battle Staff is to present the JCS, and others, with a clear, accurate picture of a crisis situation as it unfolds. Out of the mass of incoming information from all sources, which must be read, digested, understood, and placed in proper context, the JBS has to produce a condensed, timely, and accurate characterization of events as they develop.

18. [redacted]

1/ JCS Pub. 6, JOINT OPERATIONAL REPORTING SYSTEM (Short Title: JOPREP), March 1962, SECRET.

TOP SECRET

19. [redacted]

[redacted]

20. This section will discuss Joint Battle Staff actions relating to the publication of the SITREP, compare these actions with documented procedures existing prior to the Cuban crisis; and comment on the adequacy of documented procedural guidance in the light of the Cuban Battle Staff experience.

JOINT BATTLE STAFF PROCEDURES

21. The first JCS SITREP published by the JBS (No. 1-62) was issued as of 0400Z on 23 October, and was dispatched as a JCS message at 1035Z[3/] to Address Indicator Group (AIG) 936,[4/] and

1/ JCS, CONTINUITY OF OPERATIONS OF THE ORGANIZATION OF THE JOINT CHIEFS OF STAFF, Part I, "Operations at the Pentagon," paragraph 7d, 27 August 1962, SECRET.
2/ Ibid.
3/ Msg, JCS 6897, 231035Z, TOP SECRET.
4/ AIG 936 includes the following action addressees: CINCAL; CINCLANT; CINCARIB; CINCONAD; CINCPAC; CINCNELM; CINSAC; CINCEUR; CINCSTRIKE; DIA; JACE, Ft. Ritchie, Md.; JACE/Afloat, Norfolk, Va.; JACE/Airborne, Andrews AFB. It also includes CNO (OPNAV); AU Cmd Post, Maxwell AFB, Ala.; and CG MCP, Camp Lejeune, N. C., as information addressees. These addressees for SITREP messages remained the same throughout the entire period from 23 October to 6 December 1962. See JCS Pub. 6, JOPREP, op. cit.

the Director, Strategic Target Planning.[1] From 23 October until 6 December, a total of 45 daily SITREPs was produced by the JBS or (after 12 November) by the augmented Cuban Watch. The final SITREP (No. 45-62) was published at 0500 on 6 December.[2] Its discontinuance coincided with the discontinuance of Operation SCABBARDS and disestablishment of the Cuban Watch.[3]

22. In addition to the basic daily JCS SITREP, the JBS also published two supplementary SITREPs each day during the period from 23 October to 4 November.[4] In contrast to the basic SITREPs, which were published and dispatched as JCS action out-messages to the CINCs, DIA, and the Joint Alternate Command Elements (JACEs), the 26 supplementary Situation Reports produced by the JBS were addressed as memoranda for the Joint Chiefs of Staff, and their distribution was limited to the OJCS, the Office of the Secretary of Defense, the White House, and various command, operations, and plans offices in the Army, Navy, Air Force and Marine Corps.[5] They were published at eight-hour intervals after the 0500 publication time of the basic SITREP.[6]

1/ DSTP is located at Offutt AFB, Neb.
2/ Msg, JCS 7715, SECRET. All SITREP messages were classified TOP SECRET, except the last two (44-62 and 45-62), which were classified SECRET.
3/ Msg, JCS 7726, TOP SECRET.
4/ The first supplemental SITREP was published as of 2000Z on 23 October. The final supplemental SITREP (No. 26) was published at 2100Z on 4 November 1962.
5/ [redacted]

6/ [redacted]

23. C

24. The preparation of the daily and supplemental SITREPs was probably the most time-consuming and difficult task assigned to the Joint Battle Staff. The difficulties encountered in its preparation stemmed from several sources:

1/ J3M 128262, from Executive, J-3 for Director, J-3, to Joint Battle Staff Teams, subj: "JBST SOPs, 25 October 1962," (no classification).
2/ Although 2000 is given as the time for release of this supplemental in J3M 1282-62, this is probably a typographical error, and should read "2030."
3/ J3M (no number) to JCS from Deputy Director, J-3, for Director, J-3, subj: "Supplemental Situation Reports and Operation SCABBARDS," 5 November 1962, TOP SECRET.

a. [

]

1/ Interview No. 1, 7 March 1963.
2/ JCS Pub. 6, op.cit.
3/ JCS Pub. 6, JOPREP, directs the CINCs to submit SITREPS "under conditions of increased readiness (DEFCON 3, 2 or 1 command wide) of Defense/Air Defense Emergency, or War Conditions, the report is submitted daily as of 2400 (ZULU) or more often if required."

TOP SECRET

b. The lack of feedback of information from the JCS made it difficult for the JBS to determine what information to include in the SITREP. The failure to use the normal JCS debriefing mechanism, described elsewhere in this paper, proved to be a major handicap, especially during the first week of JBS operations. In the absence of direct and current knowledge of JCS decisions and actions, the JBS had an inadequate context against which to develop a rationale or set of criteria for inclusion or exclusion of data in the SITREP.[2] By default, the determination of items of significance to the JCS was essentially based on the surmise of Battle Staff Chiefs and Team Chiefs, rather than on clear guidelines from JCS.

1/ CM 51-62, from Chairman, JCS, to the Director, JS, subj: "Passing Information to White House, Secretary of Defense, and Deputy Secretary of Defense," 24 October 1962 (no classification).

2/ Interview No. 3, 11 March 1963.

c. The process of collating, organizing, and analyzing data relevant to the emerging Cuban situation was complicated by the sheer volume and complexity of the input data arriving from the CINCs, Commands, and Service War Rooms. The ideal SITREP would presumably provide the JCS and other decision makers with a continuing, comprehensive characterization and analysis of the evolving situation. This ideal was rarely, if ever, achieved in practice, partly because the JBS was not administratively staffed, trained, and equipped to coordinate and assimilate the vast volume of incoming messages and other communications. The information overload that characterized the first critical days of operation left the JBS with insufficient time to sift and analyze the general significance of the incoming reports and messages. As a consequence, the SITREP tended to develop into a recital of selected factual data, with minimal analysis or characterization of the overall situation.

d. Initial input data from the CINCs proved to be inadequate to the needs for JBS SITREP production. During the early days of the Cuban crisis, the CINCs apparently failed to provide timely reports on their own actions. This necessitated numerous direct telephone calls by Battle Staff members to the CINCs in order to secure current information.[1/] Subsequently, this problem was alleviated by requesting the relevant CINCs to submit their SITREP reports at six-hour or twelve-hour intervals, rather than submitting only one daily report. It was also eased when the JBS achieved better liaison and coordination with the Service War Rooms, particularly with Navy Flag Plot and the Army Service War Room which, together with CINCLANT, furnished a major share of the input data for the SITREP.[2/]

1/ Interview No. 3, 11 March 1963.
2/ Interview No. 6, 1 April 1963; Interview No. 7, 1 April 1963.

TOP SECRET

e. One of the major problems involved in the JBS preparation of the SITREP was the lack of a centralized source of information on the current deployment and status of forces. Status of forces information constituted a major and critical portion of the SITREP content, but the recently developed J-3 Status of Forces Branch was not able to furnish timely and detailed information of the type required for adequate reporting in the SITREP.[1/] (See Appendix "B" for a more thorough coverage of the Status of Forces Branch.) Consequently, the JBS was forced to secure this information from a wide variety of additional sources, and, in the absence of an adequate system for screening and coordinating this information, some of the information on status of forces reported in the SITREP proved to be outdated, conflicting, or erroneous.

DOCUMENTED PROCEDURES

25. A search of OJCS documentation on the SITREP that existed prior to the Cuban event reveals only two sources directly relevant to its preparation by the Joint Battle Staff:

a. JCS Pub. 6, Joint Operational Reporting System (U) (Short Title: JOPREP), March 1962, SECRET.

b. JCS, Continuity of Operations of the Organization of the Joint Chiefs of Staff, 27 August 1962, SECRET.

DISCUSSION

26. Present procedural guidance for the preparation of SITREPs is limited to the assignment of responsibility for its production and a brief description and topical outline of its content. Based on the Cuban Battle Staff experience, this guidance is not sufficient to insure the production of Situation Reports which fulfill the basic purposes of this report. Additional procedural

1/ Interview No. 4, 12 March 1963.

guidance and organization appear to be needed (a) in providing the basic criteria of relevance for the inclusion and exclusion of information to be utilized in the report; (b) in delineating and centralizing the input sources of information; and (c) in developing a cadre of personnel who are specially trained in its preparation and production.

27. The SITREP is an important document for communicating a general understanding of unfolding events, and for influencing decisions. In the Cuban crisis, despite its deficiencies, the SITREP was used as a major input for oral and written briefings, as a means of keeping the Executive Department, the OSD, and OJCS, and the unified and specified commands apprised of the situation, and as an internal communicative device for maintaining continuity of effort within the Joint Battle Staff.

PROCESSING MESSAGE TRAFFIC

INTRODUCTION

28. In this section, the procedures which were followed by the JBS for processing message traffic will be discussed in detail. These procedures will then be related to documented procedures that were in effect before and during the crisis period. The adequacy of such documentation will then be discussed in the light of experience during the Cuban crisis.

29. In general, message traffic related to the Cuban crisis began to increase on 18 and 19 October. During those two days of the crisis, some 57 messages were processed. Approximately 20 percent of these were directly addressed to JCS and 31 percent were JCS outgoing messages. During the next two days (20-21 October) approximately 118 messages were processed, of

TOP SECRET

which 35 percent were directly addressed to JCS and 27 percent were JCS outgoing. During this four-day period, the Watch in the Current Actions Center (CAC) was increasingly augmented so that by Sunday evening (21 October) a full Cuban Joint Battle Staff was manning the CAC on a 24-hour basis. During the next two days (22-23 October) and the first two days of Battle Staff Team operation, approximately 328 messages were processed. Of these, 47 percent were addressed to JCS and 15 percent were JCS outgoing. Message traffic continued to increase through 24 and 25 October, then leveled out and gradually declined, so that by the end of the first week in November the work of the JBST members had declined and become more routinized. On 12 November, the Battle Staff was reduced to an augmented Watch and then in early December the Watch was terminated as a 24-hour operation. (For a more detailed analysis of message traffic flow see Enclosure "C", "Functional Analysis of Command and Control Information Flow in the Joint Staff.")

JBST PROCEDURES

30. The general flow of message traffic into the JBS was through the Service Message Centers to the JCS Message Center. Action copies of all messages related to the Cuban situation were sent via the tube to the Emergency Action Room (EAR), sorted, time-stamped, collected into batches by EAR personnel and delivered to a message IN-basket on one of the JBST desks in the CAC.[1/] Here the messages were screened by one or more of the J-3 members of the JBST (the Deputy JBST Chief, the Operations Coordinator, or the J-3 representative) and sorted into those requiring action, those requiring the attention of the JBST Chief or higher authority, and those requiring further distribution for information purposes.[2/]

1/ Interview # 14, April 1963.
2/ Interview # 13, April 1963.

TOP SECRET

31. For messages requiring action the procedures were as follows:

a. If the message required action by a Directorate other than J-3, the message was passed on to the appropriate liaison member of the JBST. The Directorate member, in turn, would insure that the message was passed on to an appropriate action officer in that Directorate, usually via a Directorate Duty Officer.

b. If the message required action by J-3, the J-3 representative or the Deputy Team Chief would directly contact the appropriate action officer. If the subject pertained to the Quarantine, the message was placed in a Blockade Box and members of the Quarantine Watch would periodically pick up the message.

c. If the message was especially significant or required immediate action by higher authority, the Duty General was immediately notified and given the message for his consideration Otherwise, the action officers had responsibility for the proper coordination of the message.

d. Messages for information purposes (i.e., those not requiring action) were distributed to appropriate action officers and one copy was filed in the Master Message File.

32. When an action officer was assigned to handle a particular message requiring action, the date-time group, subject, and the action officer's name were posted on a Status of Current Actions board. One of the J-3 members of the Battle Staff would then follow the status of that particular action until it was completed by the action officer. Information on the current status and estimated completion dates on each pending action were posted daily. When the action was completed, the item was scrubbed and entered in an "Actions Completed Log" for reference.[1/]

1/ Interview #13, April 1963.

33. A copy of each message processed was retained for the Master Message File, which was maintained by an administrative NCO assigned to each JBST.

34. Although the Battle Staff maintained follow-up monitoring of staff actions, they did not always see the final staff action papers before they were submitted to the JCS or other appropriate authority for decision and action. Some staff action papers were coordinated and then attached to the Master Check list (MCL), which served as an agenda for the JCS. This was especially true of J-3 action papers. Still other actions were submitted through more conventional channels of the appropriate Directorate and then to the Director, Joint Staff, for submission to the JCS.[1/]

35. To complete the information flow related to message traffic, the Directors, the Director, Joint Staff, or the JCS would consider the staff action flimsy, and take appropriate action. If this action involved a message reply, and it usually did, the approved message would be dispatched through the Joint Secretariat to the JCS message center. There an information copy of the outgoing message was usually made available to the Joint Battle Staff and the action officer.

36. On the whole, the general information flow related to message traffic worked fairly well after the first three days of full Battle Staff operation (24 October), although one of the segments never did get well proceduralized. This was the process of feedback of information from JCS actions taken in the "tank", that is, the debriefing process and the securing of "comeback" copies of JCS outgoing messages on a timely basis. However, in the early period of operation (17-23 October), there was some difficulty in establishing procedures for the processing of message traffic.[2/]

1/ Interview #9, April 1963.
2/ Interview #1, 7 March 1963.

37. In the early period of augmentation, during the week of 15 October, very tight security was maintained on message traffic related to the Cuban crisis. Messages were picked up at the message distribution center and hand-carried by the Cuban Planning Group to the Office of the Director, J-3. Distribution was so carefully restricted that even the JCS/J-3 Duty Officer did not receive messages normally distributed through him. Although this mode of operation was probably necessary at the time, it caused some problems a few days later when further augmentation of the Watch and full JBST operation began.

38. First, J-3 personnel assigned to the augmented Watch and, later, to JBS Teams did not have available a complete message traffic file which could be used as a data base for background information. Moreover, they also had difficulty locating messages cited as references in later messages.[1/]

39. Second, the early period did not serve to establish basic message procedures that could later be followed by the Battle Staff. Indeed, the mode of operation adopted by JCS during this period changed normal procedures that were necessary or desirable for effective Battle Staff operations. As a result, there were problems in reestablishing message-handling procedures, in determining the number of copies required by the Battle Staff, and, more generally, in smoothing the message-handling and distribution process. The absence of key messages and the use of nonstandard methods of message reproduction further complicated the problem. While such departures from standard procedures did not seriously affect overall operations, they created the many minor procedural problems that contributed to the general confusion and frustration during the first few days

1/ Interview #4, 12 March 1963; Interview #13, April 1963.

TOP SECRET

of Battle Staff operation. It served to compound the basic problem of handling a sharply increasing volume of message traffic.

40. Another problem, not related to the first two, concerned the timely availability of copies of JCS outgoing messages. During the first week of Battle Staff operation, draft messages with supporting flimsies would be prepared and sent up the chain of command to the JCS for final decision. In the higher command decision process, messages would be modified or even redrafted by the JCS, approved, and then dispatched through the Secretariat to the Message Center for transmission. The Battle Staff frequently did not know if the message had been sent, would not receive copies of these messages if sent, or the copies would be delayed for such a long period of time that queries would come back from CINC staffs regarding the message before the JBS had received a copy of the message.[1/] Even then, if changes had been made in the original staff message by higher authority, the Battle Staff would not be informed of the reasons for the change. This type of information depended on some standard form of JCS debriefing procedure, a procedure which was not utilized during the crisis. As a result, the JBS could not adequately perform one of its normal staff functions of clarifying or resolving minor problems associated with a particular message.

DOCUMENTED PROCEDURES

41. A review of OJCS documents reveals that the following pertaining to the processing of incoming messages were in effect at the time of the Cuban crisis:

a. JAI 1180.1C, Duty Officers - Organization of the Joint Chiefs of Staff, 1 December 1961, UNCLASSIFIED.

1/ Interview #1, 7 March 1963; Interview #13, April 1963.

TOP SECRET

b. JAI 5712.2C, State Department Messages, 4 April 1961, UNCLASSIFIED.

c. JAI 5712.4, Procedures for Handling Incoming Messages, 13 March 1959, UNCLASSIFIED.

d. JAI 5712.6, Procedures for Handling Communications from CINCUNC, 7 December 1959, UNCLASSIFIED.

e. J-3 Instruction 5712.1C, Processing of Messages, 2 July 1962, UNCLASSIFIED.

f. J-3 Instruction 5712.3, Distribution of Cables to the White House, 2 October 1961, UNCLASSIFIED.

g. J-3 Instruction 5712.4, Control Procedures for Special and Sensitive State Department Messages, 22 May 1962, UNCLASSIFIED.

h. JCS-Secretariat Duty Officer Instructions, 29 May 1961, UNCLASSIFIED.

42. Procedures for the processing of outgoing messages are contained in the documents listed below:

a. JAI 5711.3B, The Preparation and Processing of Outgoing Correspondence, 3 January 1962, UNCLASSIFIED.

b. JAI 5712.1E, Outgoing Message Preparation and Procedure, 2 January 1962, UNCLASSIFIED.

c. JAI 5712.5, Distribution of State or Other Agency Originated Messages to Commanders of Unified and Specified Commands, 1 December 1959, UNCLASSIFIED.

d. J-3 Instruction 5710.1A, Responsibilities for Administrative Guidance and Review of Correspondence, Papers and Messages, 9 August 1961, UNCLASSIFIED.

e. J-3 Instruction 5712.1C, Processing of Messages, 2 July 1962, UNCLASSIFIED.

TOP SECRET

f. J-3 Instruction 5712.3, Distribution of Cables to the White House, 2 October 1961, UNCLASSIFIED.

g. JCS Message Center Operating Instruction No. 5712.1, Processing Procedures - JCS Outgoing Messages, 13 October 1961, UNCLASSIFIED.

h. Secretariat Duty Officer Instructions, 29 May 1961, UNCLASSIFIED.

DISCUSSION

43. A review of message-processing procedures listed above suggests several shortcomings when reviewed in light of augmented Watch and Battle Staff operations in crisis situations.

a. None of the documented procedures relate to Battle Staff operations, crisis operations, or wartime operations. Documented procedures are essentially oriented to peacetime operations with provision for special short-cuts for an occasional message requiring prompt action.

b. There is no centralized source of message-processing procedures available to guide staff personnel who are assigned to Joint Battle Staffs in crisis operations.

c. The elaborately documented peacetime system for message reproduction, distribution, control, and clearance, as defined in JAIs and J-3 Instructions (J-3Is), is simply too slow, complex, and cumbersome to meet operational requirements for the rapid processing of a high volume of action messages associated with crisis operations. The more streamlined and operationally oriented JBST procedures replaced many of these peacetime administratively oriented procedures. (For a more detailed analysis of message-traffic processing, see Enclosure "C", "Functional Analysis of Command and Control Information Flow in the Joint Staff.")

TOP SECRET

COORDINATION OF STAFF ACTION

INTRODUCTION

44. The JBST directly assigned messages requiring action to appropriate Directorates within the OJCS, and within J-3, to action officers or Branches. The JBST then maintained follow-up contact with the action officers in order to follow the progress of the staff action being taken. In this manner they were in a position to maintain the status of action requirements and to coordinate separate actions on inter-related subjects, and thereby to exercise limited control over the progress of staff actions.

45. Although detailed information on the activities of many individual action officers is not available, it is possible to contrast the way in which action officers and the members of the JBS interacted during the Cuban crisis with the usual peacetime procedures for coordinating staff actions. This section will discuss briefly some of the more salient observations in the procedural area.

JBST AND ACTION OFFICER PROCEDURES

46. In J-3, action officers were assigned tasks through the Battle Staff if the action was based on incoming message traffic. Actions were also assigned by the Director, J-3, and by the Deputy Directors (also called the Joint Battle Staff Chiefs or Duty Generals) when action requirements stemmed from higher authority. Although the JBST or the Director and his Deputies may have prepared some action papers in the form of recommendations to the Director, Joint Staff, most of the actions requiring detailed technical knowledge were passed on to action officers.[1/]

1/ Interview # 6, 1 April 1963; Interview # 13, April 1963.

As a result, a great deal of pressure was placed upon a relatively small, selected group of action officers knowledgeable in subjects related to the Cuban crisis. This fact, coupled with the requirement for 24-hour operation of J-3 Branches, the requirement for providing support personnel to the Battle Staff, to the Quarantine Watch, the preparation of the MCL and other crisis-related activities, and the need for maintaining continuity in the more urgent day-to-day activities, all combined to thin out the ranks of experienced action officer personnel.[1/]

47. This segment of the basic information flow through the OJCS (i.e., requirement input --staff recommendation -- command decision -- directive output) is probably the most difficult and time-consuming part of the whole process of support for command decision making. Pressure concentrated on key action officers who were most knowledgeable as well as on a few other officers having the confidence of the command. The performance of all action officers, and especially some key officers, was almost "beyond the call of duty" in attempting to respond capably and rapidly to a very heavy and demanding work load. However, had the situation escalated, or had a second crisis developed, e.g., in India or Berlin, the J-3 organization would simply have been overwhelmed due to the shortage of knowledgeable staff officers. This, in turn, could have resulted in a very seriously degraded performance of the JCS at the worst possible time, or in attempts to decentralize or restructure command responsibilities, again at the worst possible time. The lack of sufficient numbers of J-3 action officers appeared as one of the major weaknesses in the OJCS during the Cuban crisis.

1/ Interview # 7, 1 April 1963.

48. Knowledge of appropriate sources of information was one of the greatest assets of experienced action officers. Having files available, knowing whom to call, and where to go for information, with whom to coordinate on action papers, knowledge of acceptable formats and levels of detail required in those action papers--all were required to expedite action papers. Knowledge of peacetime operational procedures, combined with background information of the area or command involved, made the difference between an effective operation and an ineffective one. Integrated knowledge of this type tended to reside in the minds of only a few individuals in each Branch.

49. One of the most time-consuming parts of the action officer's job in developing recommendations involved the gathering and collation of the most current information on the subject in hand. This required frequent trips from the National Military Command Center (NMCC) to the Service War Rooms and other agencies. Because of security problems encountered by Service Staff members in getting access to the JCS area, and the NMCC in particular, it was easier for the JCS action officers to go directly to the primary sources of needed data.[1/] A great deal of the action officers' time was spent in beating a path to the Service War Rooms.

50. The press of time and the large volume of action papers to be prepared for JCS consideration largely precluded the use of the flimsy, buff, and green system for the submission of action papers.[2/] Even the "short form" green method[3/] and other established procedures for expediting the submission of papers to JCS proved to be too unwieldy from an operational

1/ Interview # 4, 12 March 1963.
2/ See documents listed in paragraph 54 of this Appendix relating to preparation of papers for Joint Chiefs of Staff consideration.
3/ JAI 5712.1E, 2 January 1962.

point of view. According to a "Summary of Greens" published by J-3, only about 25 Cuba-related greens were acted upon, considered, or circulated for information during October and November 1962. Of these, less than one-third were prepared by J-3. These data, however, are probably incomplete. A count of Cuba greens on file in the J-3 Records, Research and Analysis (RR&A) Branch indicates that a minimum of 53 green papers were circulated during the period from 17 October to 6 December 1962, and that at least 7 of these were staffed by J-3. (For a more detailed research report on this subject, see Enclosure "C", "Functional Analysis of Command and Control Information Flow in the Joint Staff.")

51. J-3 action officers prepared flimsies for approval by the Director or Deputy Directors of J-3, and, when approved, these were usually attached to the daily Master Check List (MCL) and forwarded each morning as agenda items. Even this streamlined system caused an overload on J-3 administrative capabilities and a number of such flimsies were sent to the Gold Room without having the usual reference control numbers recorded on the paper. This failure to number action papers occurred during the first few days of the crisis and was quickly corrected, but the work overload on administrative support personnel continued for a longer period of time.[1/] The Cuban experience thus serves to highlight the very close relationship between crisis operations and emergency administrative procedures -- a subject that is poorly developed and documented in existing JAIs and J-3Is.

52. The breakdown of debriefing procedures also affected action officers. Frequently, after working all night to prepare a flimsy for submission to the JCS in the morning, action

1/ Interview #2, 8 March 1963.

officers would be required to remain on call until after their item was considered. This required periods of waiting and uncertainty about the disposition of the particular action, because there was no routinized schedule for debriefing or feedback of JCS decisions.[1/] JCS meetings simply lasted too long to allow normal peacetime debriefing procedures to be utilized effectively. If the JCS had met in the Conference Room of the NMCC, as previously planned and exercised, this problem and several others could have been avoided.

53. When action officers were informed of the disposition of their action item, this information was not transmitted to the JBS in any standardized, systematic manner, such as a regularly-scheduled morning debriefing by the action officers. However, where security restrictions were not a problem, this type of information was usually made available to the JBS members on an informal basis.

DOCUMENTED PROCEDURES

54. The following documents contain procedural statements relating to coordination and submission of papers to the Joint Chiefs of Staff.

a. JAI 5711.2, Coordination Procedure on Joint Actions, 20 January 1959, UNCLASSIFIED.

b. JAI 5711.5, Administrative Procedures to be used in Processing Joint Actions, 13 December 1961, UNCLASSIFIED.

c. J-3 Instruction 5410.4, J-3 Service Points of Contact Conference, 18 August 1960, UNCLASSIFIED.

d. J-3 Instruction 5711.2A, Coordination and Consultation, 12 January 1960, UNCLASSIFIED.

e. JCS Memorandum of Policy No. 132, Coordination Procedures on Joint Actions, 21 March 1963, UNCLASSIFIED.

1/ Interview # 2, 8 March 1963.

f. Handbook of Instructions for Preparation of Reports for Consideration by the Joint Chiefs of Staff, UNCLASSIFIED.

DISCUSSION

55. In reviewing the functions of the JBS, the action officers, and the MCL activities (see Appendix "B") during the Cuban crisis, and contrasting these procedures with documented procedures related to the coordination and submission of reports to the JCS, several observations can be made. First, the current peacetime administrative procedures, even with the short-cut procedures indicated, did not seem to be responsive to the operational requirements that appeared during the Cuban crisis. The documented procedures tend to place control of much of the operational information flow in the hands of the Secretariat. However, the present administrative procedural guidelines have not been adapted to the operational realities of the J-3 organization in order to better facilitate operational support of the JCS in crisis and wartime situations.

56. The concept of a Battle Staff, the development and use of the MCL, and the J-3 methods used to submit action items for JCS consideration, in large part, replaced peacetime administrative procedures. This seems to have been in part both accidental and necessary. For example, the Chairman requested that an MCL be prepared (20 October) as a matter of record and as a guide for actions to be considered.[1/] This publication in turn became a convenient and authoritative source for operational agenda items when it was backed by appropriate action officer flimsies containing discussion, recommendations, and supporting draft messages. Once used in this manner, it soon became recognized by the Joint Staff as

1/ Interview # 6, 1 April 1963.

TOP SECRET

the fastest and most reliable method of placing urgent matters on the agenda. Secondarily, it became recognized as the most authoritative source of information available concerning which agenda items were being considered by the JCS.[1/]

57. The JBS assigned actions to the Directorates, maintained follow-up monitoring of the status of actions, developed agenda items for the MCL, and maintained comprehensive message files for reference. These are all activities defined in JAIs and other procedural documents as normal Joint Secretariat responsibilities. This raises the question of whether or not the currently documented administrative procedures are adequate to support operations in crisis and limited war situations.

1/ Interview # 9, April 1963.

TOP SECRET

APPENDIX B

J-3 BRANCH OPERATIONS

TOP SECRET

TOP SECRET

APPENDIX B

J-3 BRANCH OPERATIONS

TABLE OF CONTENTS

	Page No.
THE CURRENT ACTIONS CENTER (CAC)	78
THE EMERGENCY ACTIONS ROOM (EAR)	84
THE SUPPORT BRANCH	91
THE STATUS OF FORCES BRANCH	93
THE COMMANDS BRANCHES	97
GENERAL OPERATIONS DIVISION	99

FIGURES

FIGURE 1 - OVERALL ORGANIZATION OF OPERATIONS DIRECTORATE (J-3) AT THE TIME OF THE CUBAN CRISIS, OCTOBER 1962	79

APPENDIX "B"

J-3 BRANCH OPERATIONS

THE CURRENT ACTIONS CENTER (CAC)

1. The Current Actions Center, Current Operations Division, is the JCS focal point for the continuous monitoring, analysis, display, and reporting of worldwide events that have significance for U.S. military plans and operations. One of its missions is to insure that the JCS alerting and command-communications network is completely responsive and capable of effective operation at all times.[1/] Located in the National Military Command Center (NMCC), and manned on a round-the-clock basis, the CAC is responsible for the following specific functions:

a. Maintains 24-hour surveillance of the current situation in the NMCC and posts significant operational information on areas of tension (including a summary of friendly, neutral, potentially hostile or hostile forces).

b. Provides a J-3 Watch Officer and a Current Actions Team during normal duty hours and augments the JCS Duty Officer/J-3 Watch Officer after normal duty hours as required.[2/]

c. Provides daily guidance and briefing for the duty Emergency Actions Team, SIOP Controller Team, and JCS Duty Officer on matters pertaining to current operations.

d. Serves as the Current Operations Division point of contact for the development and scheduling of current interest items for briefings required on current operational matters.

1/ DOD Directive, No. S-5100.30, 16 October 1962, SECRET.
2/ See JAI 1180.1C, 1 December 1961, and J-3I 1180.1D, 31 May 1962, for detailed description of the JCS Duty Officer system.

FIGURE
APPENDIX B TO
ENCLOSURE B

e. Conducts daily operational briefings and prepares daily operational summaries on matters of current operational interest, as required.

f. Serves as the Current Operations Division point of contact for provision and exchange of information with the President's situation room, the Office of Emergency Planning (OEP), selected alternate facilities, the Service war rooms, and other designated agencies (e.g., State Department, National Security Agency).

g. Maintains the JCS Master Exercise Books; provides information on current and future exercises; and prepares and distributes monthly a three-month schedule of significant exercises.[1/]

2. The personnel of the Current Actions Branch consist of the Chief, CAC, who serves as JCS/J-3 Duty Officer during regular duty hours, and five Watch Operations Officers, who serve the dual function of briefing officers and Assistant Duty Officers. The CAC Branch, combined with the Emergency Actions Team, a SIOP Controller Team, a DIA representative, an Operations NCO, a Graphics NCO and a stenographer/clerk, comprise the Current Actions Watch. The Watch constantly monitors worldwide events in the NMCC and serves as the stable nucleus for expanded operations during crisis and emergency conditions.

3. On Wednesday, 17 October, the Chief of the CAC was briefed by the Director, J-3, on current Cuban plans and was directed to take the necessary preparations for an augmented Watch in strict secrecy. He was informed of the President's itinerary on Thursday, 18 October, and knew in advance that the President would cancel his scheduled political speech-

1/ J-3I 5029.1C, 14 December 1962.

making trip and would return to Washington to direct Cuban planning and military mobilization.[1]

4. Augmentation of the normal Watch was begun on Friday, 19 October, following a briefing by the Director, J-3, for key personnel in the CAC, the LANT/CARIB Branch, and other J-3 Divisions. At the same time, the Director of Operations suggested to the Chief, Current Operations Division, and to the Chief, CAC, that they begin making preparations to shift to Joint Battle Staff (JBS) operations.

5. Augmentation of the Watch was begun immediately with the addition of a J-4 (Logistics) specialist and a LANT/CARIB specialist. At the same time, actions in the CAC were stepped up to provide appropriate graphics and additional display facilities for Cuban operations. The increase in Watch personnel continued throughout Saturday and part of Sunday, 20-21 October, as other J-3 and DIA personnel were added.

6. The phase-over to Joint Battle Staff operations began on Sunday morning, when one of the CAC Watch officers began alerting personnel who were scheduled to participate in the Battle Staff.[2] From that time (21 October) and continuing throughout the subsequent week, a major portion of the time spent by the CAC Chief and the Watch operations officers was involved in briefing Battle Staff members and in attempting to achieve coordination among the JBS teams (JBST). Many of the Battle Staff members were unfamiliar with emergency procedures and their duties on the Battle Staff. As a result, much of the initial activity on the part of CAC personnel was directed to orienting the members in their duties and instructing them in the techniques of message handling, preparation of briefings, preparation of Situation Reports (SITREPs), and other essential JBS functions.[3]

1/ Interview No. 1, 7 March 1963.
2/ Interview No. 4, 12 March 1963.
3/ Interview No. 1, 7 March 1963.

7. Initial briefings of Battle Staff members involved having them read the CCOP-OUNS[1] document on JBS organization and other emergency procedures. Apparently this document proved to be insufficient to insure that the Battle Staff properly understood and carried out its functions. The general confusion and lack of coordination among the JBS during the first few days of functioning led the CAC personnel to formulate a new set of Battle Staff SOPs. These were addressed to the JBS teams on Thursday, 25 October, as a J-3 Memorandum. The memorandum defined the responsibilities of the Deputy Battle Staff Team Chief, the Operations Coordinator, the J-3 Representative, and all other team members who were supporting agencies in the NMCC. It then proceeded to outline detailed procedures and time schedules for the preparation of SITREPs, Briefings, and Situation Displays.[2]

8. Although Battle Staff operations improved steadily after the first few days of the Cuban crisis, CAC personnel continued to support and supplement the JBS activities throughout the period of its existence (21 October to 12 November). Some of the actions formally assigned to the JBS were in large part performed by regular CAC personnel. For example, one of the regular Watch Operations Officers had major responsibility for preparation of the briefing script used in General Taylor's morning briefing.[3] This briefing script comprised a major portion of other briefings conducted by the Joint Battle Staff Team Chiefs. CAC personnel also played a prominent role in assembling status of forces information, in preparing daily SITREPs, in developing Cuban

1/ "JCS, CONTINUITY OF OPERATIONS OF THE ORGANIZATION OF THE JOINT CHIEFS OF STAFF," 27 August 1962, SECRET.
2/ J3M 1282-62 (no classification), for Joint Battle Staff Teams, from Executive, J-3, for Director, J-3, subj: "Joint Battle Staff Team SOPs," 25 October 1962.
3/ Interview No. 4, 12 March 1963.

situation displays, in relaying messages to the Battle Staff, in establishing Cuban message files, and in providing other types of support.

9. Concurrent with its support of the Cuban Battle Staff activities, the CAC had to fulfill its continuing mission of monitoring worldwide events and of submitting information and reports on these events to the appropriate authorities. Although the establishment of MINIMIZE worldwide reduced the volume of routine message traffic, the CAC continued to receive priority messages and reports from the CINCs and Services. Many of these messages related to the effects of withdrawing and repositioning military forces for the planned Cuban operations. Others dealt with potential trouble spots in other areas of the world. The possibility of Soviet Bloc military action in Berlin was a matter of serious concern throughout the early days of the Cuban crisis. There was continuing concern over developments in the Congo and in Southeast Asia. A potentially serious crisis also erupted in India when full-scale fighting between Chinese Communist and Indian troops began on 20 October, and the first U.S. shipment of arms to India arrived on 3 November. An additional brief flurry of activity was created in the CAC on 22-23 October, when Yemeni aircraft attacked Aden territory and again near the end of October, when the presence of Egyptian troops on Yemen territory was admitted.

10. Each of these concurrent developments placed additional demands on the CAC personnel and on the cognizant J-3 action officers at a time when a major proportion of the entire OJCS structure was preoccupied with Cuban operations. If a second crisis had occurred at the same time--e.g., if the Indian-

Chinese war had erupted into major proportions, or if the Soviets had chosen to retaliate with a new Berlin blockade--the increased staff support required to handle these situations would have overtaxed J-3 capabilities, and, as a consequence, operational support of the JCS would have been seriously degraded.

11. With the disbanding of the Joint Battle Staff on 12 November, the Current Actions Center returned to an augmented Cuban Watch, composed of the CAC Watch supplemented by two officers and three enlisted men from J-3 and one officer, designated as contact officer for Cuban affairs, on 24-hour duty in J-4, J-5, J-6 and Special Assistant for Counterinsurgency and Special Activities (SACSA).[1/] The augmented Cuban Watch continued the basic functions of the Battle Staff, including the preparation of written briefings, the SITREP, and the inputs to the Master Check List (MCL). When the MCL was discontinued on 21 November the augmented Watch also took over responsibility for publication of a revised form of check list for Cuban operations.[2/] The augmented Cuban Watch was terminated with the discontinuance of Operation SCABBARDS at 0600Z on 6 December 1962, and the Current Actions Center then returned to its normal state of organization and functioning.

THE EMERGENCY ACTIONS ROOM (EAR)

12. [redacted]

1/ DJSM 1442-62, 12 November 1962, CONFIDENTIAL.
2/ J3M (no number), from Director, J-3, for Deputy Director, J-3, Division Chiefs, JBST Chiefs, subj: "Continuing Requirements for Duty General and JBS," 21 November 1962, (no classification).

TOP SECRET

13. The EAR operations personnel were formally briefed on the impending Cuban crisis on Friday, 19 October, although they were aware of the increased concern with Cuba sometime before that.[2]

14. In general, the work loads associated with placing calls, locating recipients of calls, and reviewing, sorting and delivering teletype messages to the CAC were increased significantly during the critical period of the crisis (19 October - 28 October). However, this increased load was adequately handled by regularly assigned, professional shift personnel and no changes or augmentation of normal shift complements were found necessary. Procedures did not change, but work loads increased.

15. Other changes in day-to-day operations were the significant increases in the number of staff personnel visiting the center and the influx of personnel using the rear door to the NMCC. The latter necessitated placing a guard at the door to insure proper authorization for entry. Under normal conditions this task is performed by EAR personnel on the basis of personal recognition through the use of a closed circuit TV camera positioned outside the door.

1/ J-315029.1C, 14 December 1962.
2/ Interview No. 14, April 1963.

TOP SECRET

16. As might be expected, the use of command telephone links increased during the crisis period. This increased usage was most noticeable for the Chairman, the Director, Joint Staff, and the Director, J-3. The Joint Chiefs, other than the Chairman, rarely used the JCS facility. The CINCs, and especially LANT, PAC, and SAC, increased their utilization of this command link, primarily in order to communicate with the Chairman. Operations personnel felt that other CINCs would have used the system more if they had known that it was probably the fastest method for contacting the Chairman. This was due to the fact that information on the location of the CJCS was continually maintained.

17. C

18. C

1/ JCS 1968/126, "Joint Chiefs of Staff Emergency Actions Procedures (EAP)," 18 July 1962, TOP SECRET.
2/ Messages JCS 6864, JCS to All CINCs, 221809Z, October 1962, TOP SECRET.

1/ Message JCS 6807, Exclusive for Chiefs of Staff; CJCS to All CINCs and Services, 201214Z, October 1962, TOP SECRET.

2/ Message JCS 6830, Exclusive for Chiefs of Staff; CJCS to All CINCs and Services, 211814Z, October 1962, TOP SECRET

3/ Message JCS 6864, JCS to All CINCs, 221809Z, October 1962, TOP SECRET.

TOP SECRET

1/ Interview No. 14, April 1963.

1/ Note: For a detailed discussion of command and control considerations involved in prepositioning an EAP implementation message, see Enclosure "A" of this study.

TOP SECRET

THE SUPPORT BRANCH

29. The Support Branch of the Operations Support Division has, among other activities, the responsibility for:

a. Preparing visual aids and maintaining a reference library of technical, tactical and operational information, maps, VuGraphs, and graphic aids required to support operations.

b. Assisting in the coordination, preparation and conduct of briefings and orientations. It is composed of two officers, two NCOs, and five illustrators.[1/]

30. During the Cuban crisis, this Branch provided:

a. Support of the morning briefings and change of Watch briefings.

b. Support of the information and administrative requirements of the JBS and the JCS/J-3 duty officers.

31. Branch personnel were notified of the impending crisis situation on 19 October. On 22 October they went on 24-hour manning, with three shifts of two personnel per shift (3 personnel during the day shift). During the first three days

1/ J-3I 5029.1C, 14 December 1962.

TOP SECRET

of this operation, the Branch was seriously overloaded with requests for briefing aids and graphic display work. This was especially true during peak activity periods--e.g., early in the morning just prior to the morning briefing of the Chairman.[1/]

32. During the third week of the crisis, the Branch joined personnel of the Status of Forces Branch in order to achieve a better distribution of the workloads on the two undermanned branches. This was, and is, a natural integration of functions under pressure which had not been reflected in administrative organization. Both Branches also worked as an integral part of the Joint Battle Staff and CAC operations.

33. Although lack of modern graphics and display production material, adequate map bases, and storage space provided some minor problems, the major "flaps" stemmed from the changing requirements for displays and graphics and from the lack of uniform guidance on standardizing the quality and legibility of displays. These were important problems because they prevented anticiaption of requirements and distribution of workload over the entire shift, as well as causing a considerable amount of "re-do" or "restart" work.

34. These problems stemmed, in part, from the fact that the Branch had to take direction from two different masters--the operations personnel that they supported, (i.e., the JBST and JCS/J-3 Duty Officer) as well as, administratively, from the Division Chief. Staff personnel who were interviewed suggested that this could be rectified in the future by integrating the Branch personnel and its operational support functions into the CAC Watch which it serves.

1/ Interview No. 15, April 1963.

THE STATUS OF FORCES BRANCH

35. The Status of Forces Branch has the responsibility for collecting, collating, displaying, and disseminating data on the composition, location and status of U.S. Military Forces. In accomplishing this function, the Branch provides information reported by the Joint Operational Reporting System (JOPREP) and insures that such reports are timely, accurate, and responsive to requirements of the OJCS.[1/]

36. Historically speaking, the Branch was the newest of the J-3 Branches to be formed prior to the crisis. Although it had been authorized in February and first manned in July, it was not until September 1962 that its full complement of two officers and three enlisted men were on board. HIGH HEELS II in late September provided the first operational experience with data processing and display requirements against which to formulate and organize procedures. The Cuban crisis struck shortly thereafter and it provided a second, much different type of operational experience -- an experience for which the Branch was not fully prepared.

37. Branch personnel were notified of the impending crisis on 19 October and were brought in on Saturday to provide information, briefing and display support for the augmented Watch. On Sunday, the Branch went on 24-hour operations in support of the Battle Staff. Two 12-hour shifts were formed of an officer and an enlisted man, with one enlisted man covering JOPREPs on the "rest of the world".[2/]

38. The primary support activities of the Branch during the Cuban crisis were:

1/ J-3I 5029.1C, 14 December 1962.
2/ Interview No. 11, April 1963.

a. Determining the status of troops involved in the OPLANS _____. This involved determining troop lists, specifying the location of particular units, their status and strengths, as well as status of troop deployments, ETDs, ETAs, modes of transportation, etc.

b. Monitoring all reports containing status of forces information in order to develop data.

c. Preparing information, displays, and formats for JCS SITREPs, the morning briefings, and the MCL.

d. Supporting the Quarantine Watch, determining display format requirements for the conference room and for the quarantine operations display.

e. Providing general information support to JBST members on request.

39. The type and quantity of information requested of the Branch by J-3 staff officers during the crisis far exceeded the original terms of reference used in the establishment of the Branch. These additional demands proved to be the primary source of difficulty in Branch operation. Requests for information came from many sources and, as a result, the formats and levels of aggregation of data on Force Status were varied and continually changing. This compounded the task of tabulating and displaying the data and disrupted previously developed procedures for handling information requests. Information that was collected, collated, and displayed, was used to support:

a. The Chairman's Briefing;

b. JBST Change of Watch Briefing;

c. JCS Situation Reports;

d. Action Officer's Requests;

e. Individual Battle Staff Members and other Joint Staff personnel;

f. Conference Room Displays, JBST Displays, and General Status of Forces Displays for the CAC.

40. The working environment was described as "something new every hour," "we couldn't anticipate what would be asked of us next"; and "we could only do the basic and important things."[1] The type of informational requirements placed on the Branch simply exceeded the expectations that the Branch personnel had developed as a result of their HIGH HEELS II experience.

41. Points of contact for these special classes of information had not been developed nor had the amount of detail required by the various users of the Branch been anticipated. As a result, the Service War Rooms were frequently used by the Branch to obtain detailed information not previously anticipated in SOPs.

42. The Branch requested additional personnel to man the 12-hour shifts and to serve as service liaison personnel in order to handle the overwhelming task of maintaining up-to-date Status of Forces information. Additional enlisted personnel from DCA and two officers from the Joint Command and Control Requirements Group (JCCRG) were provided after the first two weeks of operation. These personnel had difficulty for several days because they lacked training in Status of Forces, JOPREP, and related matters required to operate effectively in the Branch. They overcame their lack of experience, however, and later provided valuable assistance.

43. In general, it was found that JOPREPs containing Status of Forces information, i.e., REDAT, REDNON, REDRAD,[2] were

1/ Interview No. 11, April 1963.
2/ Operational Ready Reports, Atomic, Non-Atomic and NORAD.

not as useful as the SITREPs submitted by the Commanders in Chief. The JOPREPs were not timely and did not contain the amount of detail required by various users of this information. The Personnel Status Report (PERSTAT) was of little or no value and was later discontinued. Problems were also encountered in determining the location and the status of forces being deployed. When forces were assigned from one command to another, the first command's reports would stop and not be picked up by the new command having operational control. As a result, there would be a gap of a few days in which there were no reports on the force. Thus, the movement of forces became a major problem in determining the status of forces assigned to the Cuban operation. In effect, the JOPREP was not responsive to Joint Staff requirements for implementing contingency plans.

44. By the first part of the third week (5 November), the activity of the Branch had begun to level off to a point where personnel could handle most of the requests for information in a routine fashion. A week or so later (12 November), activity associated with the crisis had diminished to a point where the Branch Chief could break off and attend to more pressing day-to-day staff activities.

45. In general, the Cuban crisis emphasized the need for a highly detailed data base of Status of Forces information, a capability for rapid retrieval of that information in many forms, and the need for more clearly defined requirements for information support. In the latter case, it was felt that the allocation of responsibility for the collection and maintenance of detailed Status of Forces information between each Service Command Post and the NMCC would help. If this information could then be made rapidly available to each

facility upon request, it would materially improve the capacity to provide detailed and special information support required during crisis operations.

THE COMMANDS BRANCHES

46. The Commands Branches of the Current Operations Division have among other functions the responsibility for:

a. Recommending policies and actions, except those pertaining to the review of plans, for current operational direction of commanders of unified and specified commands and for U.S. forces not under operational control of the JCS.

b. Taking actions on operational matters concerning international treaty organizations and the development and implementation of national policy in areas for which the unified and specified commands are responsible.

c. Monitoring Joint Staff actions on sensitive situations in critical areas which could lead to U.S. military operations.

d. Coordinating with other J-3 Divisions, as appropriate, in reviewing plans, monitoring the impact of implementation of the DEFCON system, other readiness measures of the unified and specified commands and related NATO measures.

e. Participating in Battle Staff operations.[1/]

47. The Commands Branches are comprised of area specialists and they provide a large percentage of the J-3 action officers available to support the JCS decision-making process on immediate operational problems in crisis situations. It is beyond the scope of this paper to treat the activities of all action officers in each of the Branches; nor is it possible to de-

1/ J-3I 5029.1C, 14 December 1962.

scribe the activities of action officers in the Operational Plans and General Operations Divisions. However, on the basis of interviews with personnel in two of the Branches,[1] it is possible to outline the general mode of operation of these Branches during the crisis, and to describe some typic activities of the LANT/CARIB Branch, which was most directly involved.

48. [

]

49. On 19 October security was lifted. "The Johnson Task Force opened up and we (LANT/CARIB Branch) began working on various assignments directed by J-3 for the JCS." The major activities centered around action papers related to OPLANs [ ] and to the Rules of Engagement for Quarantine Operations. Involvement in the latter activity resulted fro the fact that one member of the LANT/CARIB Branch had been assigned to the Quarantine Watch.[3]

1/ Interview No. 7, 1 April 1963; Interview No. 10, April 19
2/ Interview No. 10, April 1963.
3/ Ibid.

TOP SECRET

50. During the weekend of 19-21 October, "problems came faster than we could respond."[1] At this time the Commands Branches went on 24-hour operation, further spreading out the number of available personnel. In most cases, this meant that only one or two action officers were available at any given time to cover the work of each Branch. However, routine message-processing activities not related to the crisis slackened during MINIMIZE. Some action officers felt that 24-hour manning of at least some of the Branches was not necessary and that it impaired overall action officer efficiency for a number of reasons.[2] There is insufficient evidence to evaluate this problem, although it appears obvious that reduction of the 24-hour manning requirement in selected Branches would tend to conserve action officer personnel for more effective utilization elsewhere.

51. For the first few days of the crisis (20-24 October), the LANT/CARIB Branch was handling "about 20 actions a day." (For more detailed discussion of the role of action officers in support of the JBST, see Appendix "A", "Coordination of Staff Actions").

GENERAL OPERATIONS DIVISION

52. The General Operations Division has, among other functions, the responsibility for those operational staff actions pertaining to continuity of operations, the JCS emergency action procedures and readiness conditions, the JOPREP, space and weapons systems, JCS exercises, and general operational matters not assigned to other Divisions.[3]

1/ Interview No. 10, April 1963.
2/ Interview No. 7, 1 April 1963.
3/ J-3I 5029.1C, 14 December 1962.

53. During the crisis, this Division provided personnel to assist in manning the JEST and the Quarantine Watch. They also supplied action officers and support to the other Current Operations branches. Most of the remaining personnel were involved in collecting and coordinating information for the MCL, which was produced under the direction of the Chief, General Operations Division.

54. On Friday, 19 October, the Division was instructed to keep 50 percent of its personnel on duty at all times in order to provide staff support for the impending crisis. On Friday night and Saturday, personnel of the Division, in coordination with the Cuba Planning Group, the Quarantine Watch, and Current Operations Division personnel, were working up an agenda of actions to be taken by the JCS. This necessitated trying to find out what had happened during the preceding three or four days of tight security control. The responsibility for producing this first Master Action List (MAL) was initially assigned to the Quarantine Watch. The first MAL was prepared by 0500 Saturday for the morning session of the JCS and a second MAL was prepared for the afternoon session. MAL No. 3 was prepared Saturday night.[1/]

55. About this time, the Chairman, JCS, approved the idea of the MAL, and indicated that he wanted it maintained as a continuing record and history of the Cuban crisis. Despite this initial, limited definition of purpose, however, the MAL -- subsequently renamed "The Master Check List" -- was utilized as an important part of the daily JCS agenda for immediate operational matters.[2/]

1/ Interview No. 9, April 1963.
2/ Interview No. 6, 1 April 1963.

56. By Saturday night, a 24-hour operation involving the collection, production, and coordination of the MCL was being directed by the JBST Chief. On Tuesday, 23 October, the responsibilities for preparation of the MCL were confirmed after the fact by an unnumbered memo from the Deputy Director, J-3, to Battle Staff Team Chiefs and Division Chiefs.[1/] This memo assigned responsibility for overall coordination to the General Operations Division; determination of items to be considered one, two, and three days in advance to the Operations Plans Division; and current actions taken or under consideration to the JBST and Current Operations Division. The memo further directed that the MCL be prepared and submitted to the Director, J-3, by 0700 each morning.

57. The assembly of the MCL would begin at midnight. The JBS would abstract from the status of current actions display the more relevant actions taken and all JCS OUT-messages released during the previous day. The Current Operations Division would submit statements of "Significant Pending Items" and action paper flimsies referring to pending actions. The Operations Plans Division would submit items to be considered one, two, and three days in advance. The materials were typed and edited, and then, with action officer flimsies attached, they were delivered to the J-3 Duty General (JBST Chief) for approval by 0500 each day. The MCL was then submitted to the Director, J-3, at 0700, to the Chairman at 0800, and finally to the JCS, whose meetings usually began at 0830.

58. After the first few days during which this system was in operation, the MCL was distributed to all J-Staff Directorates.

1/ J3M (no number), from Deputy Director, J-3 to Battle Staff Team Chiefs and Division Chiefs, subject: "Responsibilities for Preparation of Daily Master Check List for Cuban Operations (J-3 MAL)," 23 October 1962, SECRET.

Very quickly, action officers from the other Directorates began to input their items to the MCL group and backed them with supporting or implementing flimsies.

59. The MCL soon became informally recognized by the Joint Staff as the most efficient means of insuring that urgent items related to Cuba would be taken up by the JCS. It also became the most authoritative source of "today's news" among the J-Staff members, since it constituted a series of actions that would be discussed during the day by the JCS and also a history of actions taken on the previous day.

60. The production of the MCL became quite routine after the first week of operation, with mats of each day's agenda being produced, then corrected and reproduced to provide a history of actions taken on subsequent days. This operation continued until P+45 (6 December), at which time the MCL was discontinued.1/

61. It is interesting to note that this very important administrative method for accelerating the submission of papers to the JCS is not contained in any procedural documents. Indeed, it is in sharp contrast to normal peacetime procedures contained in the handbook, INSTRUCTIONS FOR PREPARATION OF REPORTS FOR CONSIDERATION BY THE JOINT CHIEFS OF STAFF, and other related procedural documents.2/

1/ For further analysis of the MCL, see Enclosure "C", "Functional Analysis of Command and Control Information Flow in the Joint Staff."

2/ JAI 5711.2, 20 January 1959; J-3I 5711.2A, 12 January 1960; J-3I 5410.4, 18 August 1961; JAI 5410.2B, 12 December 1960; JAI 5711.3B, 3 January 1962; JAI 5712.4, 13 March 1959; MOP 97, 19 June 1961; MOP 132, 21 March 1963.

TOP SECRET

62. Implementing flimsies prepared by action officers were reproduced in 20 white copies and forwarded with the MCL each morning. Although action officers used the Services extensively for information purposes and informal coordination, they did not coordinate actions in accordance with the formal peacetime procedures. To do so would have seriously impaired the ability of the OJCS to be responsive to unified and specified commands in the rapidly changing political/military environment surrounding the crisis.

63. The MCL procedure had the effect of allowing action officers to go the flimsy, buff, and green route in a matter of hours instead of days. Action papers were submitted at JCS meetings as Director, Joint Staff Memoranda (DJSMs). This process short-cut the elaborate coordination process required during peacetime operations. As a result, the Joint Staff was able to operate more like a true military staff.